

BINDURA UNIVERSITY OF SCIENCE EDUCATION

FACULTY OF ENGINEERING

ELECTRONIC ENGINEERING DEPARTMENT

2022 -2026

FINAL YEAR PROJECT

TITLE: Design and develop an efficient negative ion generator specifically for air purification in mining environments.

GODFREY MKWAKWAMI

B225278B

DECLARATION

I hereby certify that the work presented in this project entitled DESIGN AND DEVELOPMENT OF A NEGATIVE ION GENERATOR FOR EFFICIENT AIR PURIFICATION IN MINING ENVIRONMENTS is an authentic record of my own work carried out in partial fulfilment of the requirements for the award of the degree of BACHELOR OF SCIENCE IN ELECTRONIC ENGINEERING in the DEPARTMENT OF ELECTRONIC ENGINEERING, BINDURA UNIVERSITY OF SCIENCE EDUCATION.

The project was carried out during the period from AUGUST 2022 to JUNE 2026 under the supervision of ENG S KOMICHI. .

I declare that this work has not been submitted for the award of any other degree or qualification in this or any other institution.

Student Name: GODFREY MKWAKWAMI Chairperson Name Eng Takawira

Signature: G MKWAKWAMI Signature 

Date: 17 /08/26 Date…19/08/26

Certified by:

Supervisor: ENG. S. KOMICHI

Signature: 

Date: 18-08-2026

ACKNOWLEDGEMENTS

I would like to express my sincere gratitude to Almighty God for providing me with the strength, wisdom, and perseverance throughout the duration of this project.

I would also like to extend my appreciation to my supervisor Eng. S komichi for the valuable guidance, constructive comments, and continuous support provided during the planning, design, implementation, and completion of this project. The knowledge and encouragement received played a significant role in the successful completion of this work.

Special thanks are extended to the lecturers and staff of the Department of Electronic Engineering of BINDURA UNIVERSITY OF SCIENCE EDUCTION for the technical knowledge and assistance provided throughout my studies.

I am grateful to the management and technical staff of Freda Rebecca Gold Mine for granting me the opportunity to undertake my industrial attachment and for providing an environment that enhanced my practical engineering skills. Their support and professional guidance contributed greatly to the development of this project.

I would also like to thank my family Jehoshaphat Mkwakwami, Japhet Mkwakwami, Rodo Mashayambe, My future wife and friends for their encouragement, patience, and support throughout the course of my studies. Their motivation helped me remain focused and committed to achieving my academic goals. Finally, I would like to acknowledge everyone who contributed directly or indirectly to the successful completion of this project. Your support and assistance are greatly appreciated.

ABSTRACT

Air pollution caused by dust, smoke, and suspended particles is a common challenge in mining environments. During industrial attachment at Freda Rebecca Gold Mine, it was observed that airborne particles can reduce air quality and create an unhealthy working environment for mine personnel. This highlighted the need for an effective air purification system capable of reducing the concentration of airborne contaminants.

To address this problem, a negative ion generator for air purification was designed and implemented. The system consisted of an isolation transformer, bridge rectifier, NE555 timer, IRFP450 MOSFET, high voltage transformer, and needle ionizer. The isolation transformer reduced the mains voltage to 12 V AC, while the bridge rectifier converted it to DC voltage. The NE555 timer generated switching pulses that controlled the IRFP450 MOSFET. The MOSFET drove the high voltage transformer, which stepped the voltage up to approximately 15 kV. The high voltage was then applied to a needle ionizer to generate negative ions. Compared with conventional air purification systems that rely on filters and complex control systems, the proposed design provides a simpler and lower cost approach to air purification.

Testing was conducted on each stage of the system to verify its performance. The isolation transformer successfully produced 12 V AC, the bridge rectifier generated 11.5 V DC, and the high voltage transformer achieved an output of approximately 15 kV. The needle ionizer successfully generated negative ions when connected to the high voltage source.

The effectiveness of the system was evaluated using a transparent tube filled with smoke. During operation, the smoke concentration decreased significantly and the air inside the tube became visibly clear. These results confirmed that the generated negative ions interacted with airborne particles and improved air quality. The project achieved its objective of designing and implementing a functional negative ion generator for air purification and demonstrated its potential application in mining environments such as Freda Rebecca Gold Mine.

TABLE OF CONTENTS

COVER PAGE 1

DECLARATION.....2

ACKNOWLEDGEMENTS.....3

ABSTRACT.....4

Table of contents……..…….5

LIST OF FIGURES.....6

LIST OF TABLES.....7

CHAPTER 1: INTRODUCTION 10

1.1 Overview 10

1.2 Problem Statement 11

1.3 Aim 11

1.4 Objectives 12

1.5 Problem Solution 12

1.6 Conclusion.....13

CHAPTER 2: LITERATURE REVIEW 14

2.0 Introduction 14

2.0 Air Purification Technologies 14

2.1 Mechanical Filtration 15

2.2 Electrostatic Precipitation 19

2.3 Ionization Technology 20

2.4 Isolation Transformer……..……22

2.5 Bridge Rectifier……..……24

2.6 NE555 Timer Oscillator 25

2.7 IRFP450 N-Channel MOSFET Driver 27

2.8 High Voltage Transformer 28

2.9 Needle Ionizer 28

2.9 Conclusion 29

CHAPTER 3: SYSTEM DESIGN 36

3.0 INTRODUCTION…….……36

3.1 Isolation Transformer Design 38

3.2 Bridge Rectifier Design 38

3.3 NE555 Timer Circuit Design 39

3.4 IRFP450 MOSFET Driver Design 39

3.5 High Voltage Transformer Design 61

3.6 Needle Ionizer Design 70

CHAPTER 4: IMPLEMENTATION AND TESTING….....82

4.1 Introduction 88

4.2 Implementation of Isolation Transformer 89

4.3 Implementation of Bridge Rectifier 89

4.4 Implementation of NE555 Timer 92

4.5 Implementation of IRFP450 Channel MOSFET 95

4.6 Implementation of high voltage Transformer 96

4.7 Implementation of Needle Ioniser 97

4.7.0 Conclusion……..…….97

4.8 Implementation of the Negative Ion Generator Circuit ……..…….98

4.9 Implementation of the working of the negative generator in Air purification……99

4.9.0 Conclusion…….100

CHAPTER 5: EVALUTION RESULTS ANALYSIS.….....110

5.0 Introduction 113

5.1 Evaluation of Bridge Rectifier …….....115

5.2 Evaluation of 555 Timer…….....118

5.3 Evaluation of IRFP450 MOSFET 118

5.4 Evaluation of High Voltage Transformer Output Results 119

5.5 Evaluation of Needle Ioniser ……..119

5.6 Conclusion 120

CHAPTER 6: CONCLUSIONS AND RECOMMENDATION.....127

6.1 INTRODUCTION 128

6.2 Discussion of project results.....128

6.3 Key Success of project.....128

6.4 Achievement of project Objectives.....128

6.5 Conclusions…..…….…..…… 129

References……130

LIST OF FIGURES

Figure 2.0 Mechanical Filtration System 12

Figure 2.1 Electrostatic Precipitator 15

Figure 2.2 Ionization Technology 16

Figure 2.3 Isolation Transformer 18

Figure 2.4 Bridge Rectifier 21

Figure 2.5 NE555 Timer Oscillator 24

Figure 2.6 IRFP450 MOSFET 26

Figure 2.7High Voltage Transformer 31

Figure 2.8 Needle Ionizer 34

Figure 3.0 Block Diagram of Negative Ion Generator 36

Figure 3.0 Isolation Transformer Design and Simulation 40

Figure 3.2 Bridge Rectifier Design 44

Figure 3.3 Bridge Rectifier Analysis 46

Figure 3.4 NE555 Timer Design and Simulation 53

Figure 3.5 NE555 Output Waveform 55

Figure 3.6 IRFP450 Driver Circuit 60

Figure 3.7 High Voltage Transformer Circuit 69

Figure 3.8 Needle Ionizer Construction 74

Figure 4.0 Hardware Prototype 84

Figure 4.2 Experimental Setup 89

Figure 4.3 Smoke Chamber Testing 93

Figure 4.4 Final Implemented System 99

LIST OF TABLES

Table 3.0 Isolation Transformer Specifications 37

Table 3.2 Bridge Rectifier Design Parameters 41

Table 3.3 Ripple Voltage Calculations 43

Table 3.4 Comparison of Calculated and Simulated NE555 Parameters 56

Table 3.5 IRFP450 Design Parameters 61

Table 3.6 High Voltage Transformer Parameters 68

Table 4.0 Isolation Transformer Test Results 83

Table 4.2 Bridge Rectifier Test Results 87

Table 4.3 NE555 Timer Experimental Results 91

Table 4.4 High Voltage Output Measurements 95

Table 4.5 Air Purification Results 98

Table 5.1 Comparison of Theoretical and Experimental Results 112

Table 5.2 Comparison with Existing Air Purification Systems 119

CHAPTER 1: INTRODUCTION

1.1 Overview

Mining industry plays a pivotal role in the global economy; it provides minerals, which are used for a wide range of industrial processes. It is, however, highly detrimental to the health of its employees because they work in the conditions of dust, poisonous gases, and particle contamination of atmospheric air. Such conditions can lead to health issues, lower productivity and development of diseases. However, conventional methods of air purification (such as filtering), would not be enough in such working conditions, as there is a higher probability for pollution than in other working environments. Negative oxygen ions with one extra electron have shown ability to cleanse the air by attracting particles and making them gather together until they fall to the ground and decrease the number of inhalable pollutants. Thus, the electric field with the negative charge forms in the atmosphere. With the increase in the natural electric field, corona discharge phenomena occur. Some changes in the geometric system were made during the study of such natural process.

There were also a variety of other systems invented by other scientists. However, every system had its own drawbacks, including cost, effective working distance and pollution caused by the formation of some substances like O3 (Ozone) at ground level. This paper proposes the concept of modification by the artificial production of the negative ion that is inexpensive, more effective at wide range and also environment friendly. The study and research of air ions has been a part of traditional science in the field of atmospheric electricity, since air ions regulate the conductance of the air in the atmosphere. Air ion is used in atmospheric electricity to refer to all the charged air particles that form the basis of air conductance in the field of atmospheric electricity. As a result, there are several types of air ions that vary in chemical composition, weight and size.

In each molecule, there is a nucleus of positively charged protons that are surrounded by negatively charged electrons. The objective of nature is to create balance because the aim of nature is that there will be the same number of protons and electrons or creating balance between the negatives and positives. This happens in the case of a balanced air molecule. Whenever there is enough energy exerted on the air molecule, one of the electrons will be separated from the nucleus and hence we get air ions.

The above compound gets positively charged. The normal concentrations of these ions in fresh air are 2000-4000 for negative ions while at the great waterfall, there could be over 100,000 negative ions. In a polluted environment such as in an industrial area, there could be less than 100 ions per cubic meter. Human beings have been found to feel revitalized when close to the sea, great falls or even while bathing. This could be attributed to the high concentration ratio of negative ions to positive ions in the mentioned places. There exist 2000 negative ions and 1000 positive ions in the sea.

1.2 Problem Statement

Freda Rebecca gold mine contains a high concentration of pollution that has adverse effects on the health of the workers. The dust and poisonous gases present at such a site pose the risk of respiratory diseases among other issues, including low efficiency and increased health expenses. Air purification technologies available are not appropriate for dealing with such challenges in a mining setting. This is what happens in any mine environment; thus, a new technology that would assist in solving the challenge is greatly required.

1.3 Aim

Design and develop an efficient negative ion generator specifically for air purification in mining environments.

1.4 Objectives

1. To Design of Isolation Transformer: Ensures electrical isolation from the main grid and reduces the voltage.
2. To Design of a Bridge Rectifier: Changes AC output from the transformer into DC voltage.
3. To Design of IC 555 Timer Oscillator: Produces square wave signals required for switching of the MOSFET.
4. To Design of a MOSFET Transistor: Used for switching and supplying electricity to the high voltage transformer.
5. To Design of a High Voltage Transformer: Raises voltage from 12V-15V DC to several kilovolts.

6. To Design of a Needle Ionizer (Emitter): Emits negative ions due to corona discharge at high voltage.

1.5 Problem Solution

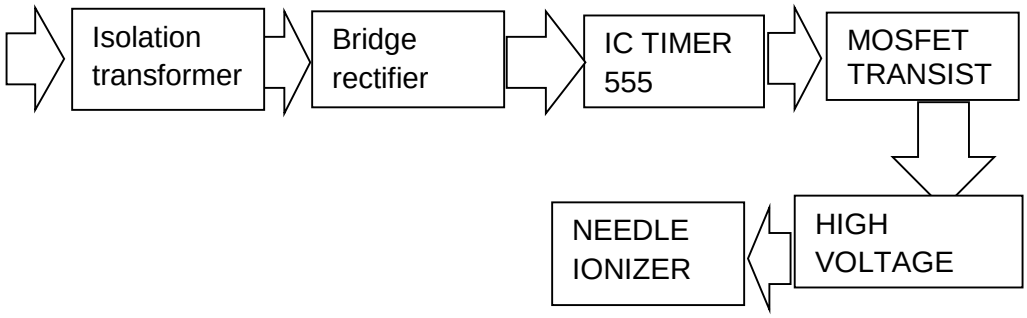

Figure 1.1: Block Diagram of Negative Ion Generator

Explanation of the Functional Blocks

Figure 1.1 represents the functional block diagram of the negative ion generator designed for air purification purposes in mining. The negative ion generator consists of different stages including electrical and electronic stages. All the stages are connected to produce negative ions of high voltage capable of reducing airborne dust particles and smoke as well as other contaminants within underground mining processes. The negative ion generator functions on the principle of production of corona discharge from a high-voltage electrostatic field produced from low-voltage electrical energy. Each block represented in figure 1.1 contributes towards generating the negative ions in an efficient and safe way. As represented in the block diagram of Figure1.1. The entire operation of the negative ion generator represented in Figure 1.1 starts with input AC electrical power into the isolation transformer. The transformer supplies the electrical energy to the bridge rectifier block where conversion of AC electrical energy to DC electrical energy takes place. The DC electrical energy activates the IC 555 oscillator circuit producing switching signals. The switching pulses activate the MOSFET transistor allowing alternating flow of electric current in the primary winding of the transformer.

The transformer increases the voltage to a few kilovolts, which is used on the needle ionizer electrode. The electric field created by the needle generates corona discharge causing the formation of negative ions. These ions are allowed into the ambient air where they react with air contaminants, leading to improved air quality in mining settings. these components function sequentially to efficiently facilitate this neutralization process. The negative ion generator designed to solve the problem of air pollution in mining settings works through generation of negatively charged ions to neutralize any hazardous airborne particles. Through designing a circuit capable of transforming and amplifying electrical energy into a high voltage output, the system is able to reduce dust, smoke, and other contaminants.

1.6 Conclusion

This research offers an effective and practical solution that can help solve some of the occupational health problems of the mining industry by addressing its problems relating to airborne pollution. Using a negative ion generator which is adapted to mining conditions, it becomes possible to provide significant improvements in air quality, enhance safety at workplaces and improve health conditions. The presented system uses inexpensive components that form a working system, thus allowing to create such systems on the basis of a cost-effective solution. Figure 1.1 shows the full architectural structure of the developed negative ion generator system. All blocks are important for achieving the aim of transforming the voltage from the input to output voltage for generating negative ions. An isolation transformer, bridge rectifier, oscillator IC555, MOSFET switching transistor, high-voltage transformer, and needle ionizer allow creating a reliable system for generating negative ions.

CHAPTER 2: LITERATURE REVIEW

2.0 Introduction

Air pollution is one of the most widespread environmental problems affecting the environment not only in industrial but also in residential settings. Mining, production, and processing of chemicals produce air pollutants, such as dust, smoke, and hazardous gasses. All these substances adversely affect the indoor air quality and may cause health problems for people living in confined spaces with insufficient ventilation [1] J. D. Spengler and K. Sexton, "Indoor air pollution: A public health perspective," Science, vol. 221, no. 4605, pp. 9–17, 1983.In order to deal with these problems, various air purification systems have been created. The most commonly used air purification systems involve mechanical filters, electrostatic precipitators, and ionizers. Each technology differs in its operational principle, performance, power consumption, and maintenance needs [2] C. Weschler, "Changes in indoor pollutants since the 1950s," Atmospheric Environment, vol. 43, pp. 153–169, 2009.Mechanical filters are capable of cleaning the air of various particles as the dirty air is passed through the material of fibers.

In electrostatic precipitation technique, use of electric field causes charging of particles and subsequent collection of the particles at opposite charged plates. The ionization process involves generating charged ions which then attach to particles suspended in air [3] J. Hinds, Aerosol Technology: Properties, Behaviour and Measurement of Airborne Particles, Wiley, 1999. Amongst all techniques available, the negative ionization method has received much interest owing to the efficiency of the process in improving air quality without using substantial energy. Negative ion generator is a device which generates negatively charged ions which then attach to particles in air like dust, pollen, and smoke. These charged particles are made to settle due to their weight thus cleaning the air [4]. Yamada, “Effects of negative air ions on indoor air quality,” International Journal of Environmental Science, vol. 12, pp. 45–52, 2010

In this project, we have suggested development of a Negative Ion Generator whose function will be to generate high voltage necessary for the ionization process through electronic components. The various functional blocks in the system include isolation transformer, bridge rectifier, NE555 timer oscillator, IRFP450 Mosfet power transistor, high voltage transformer, and needle ionizer.

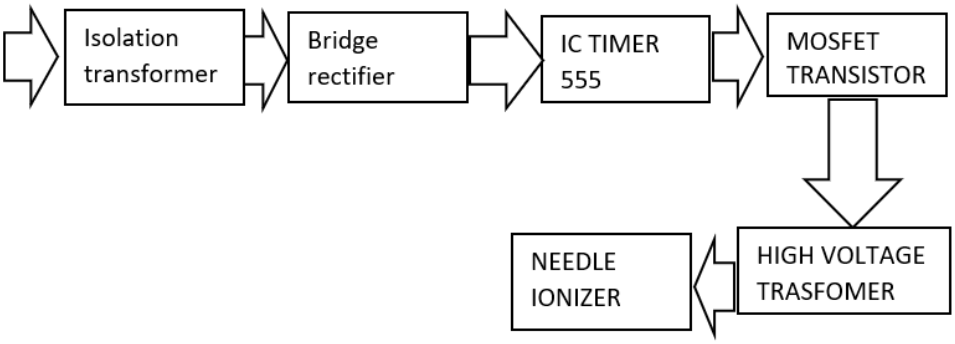

Figure 2.0: Block Diagram of the Proposed Negative Ion Generator

Figure 2.0 reviews the theoretical background and previous studies related to air purification technologies and the electronic components used in the proposed system.

2.0Air Purification Technologies

2.1 Mechanical Filtration

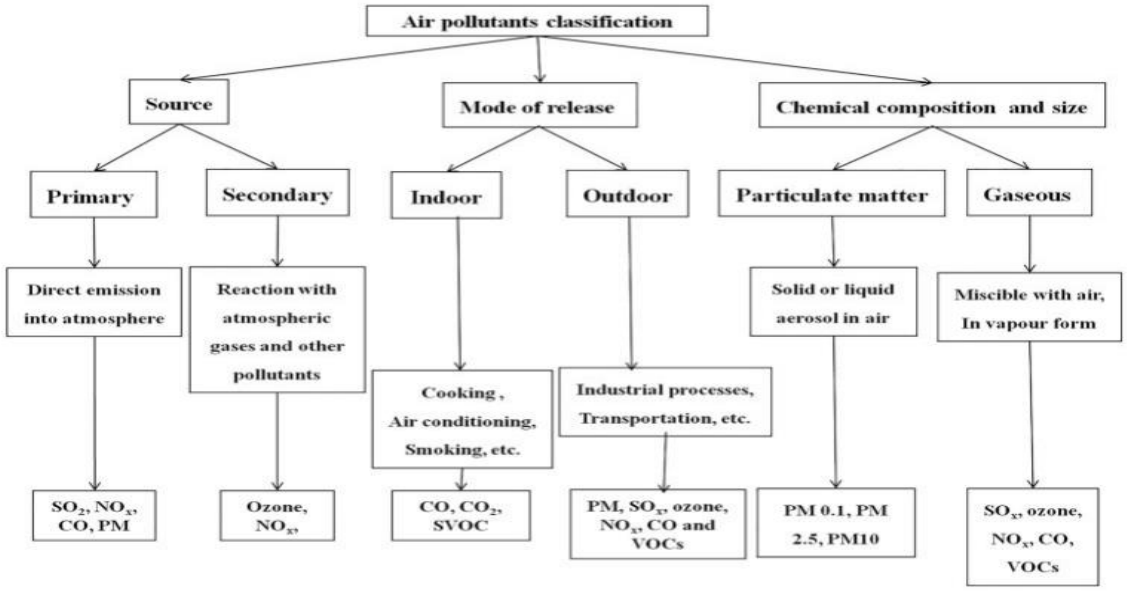

Figure 2.1 Theoretical diagram of Mechanical Filtration

As can be seen from Figure 2.1, there are three major classifications of air pollutants, which include the pollutant's source, its way of emissions, and the pollutant's chemical composition and physical size. Such information is useful for understanding the way pollutants arise in the environment, how and where they are released and in what physical forms they occur in the atmosphere. Knowing these three classifications is critical in the development of air purification and filtration technologies since different pollutants need to be treated in different ways.

The first classification shown in Figure 2.1 shows air pollutants depending on their source. There are two major classes of pollutants including primary and secondary air pollutants. Primary air pollutants refer to those types of pollutants that arise directly from the air pollution sources like vehicles, industries, mining, and combustion. Primary pollutants include sulfur dioxide (SO_2), nitrogen oxides (NO_x), carbon monoxide (CO), and particulate matter (PM). On the other hand, secondary pollutants arise in the atmosphere as a result of a reaction between primary pollutants and atmospheric gases, light, or moisture in the air. Such pollutants include ozone (O_3) and nitrogen compounds. The second way of classifying air pollutants is by the mode of emission, and this is further categorized into indoor pollutants and outdoor pollutants. Indoor pollutants are emitted as a result of activities that take place indoors. This includes smoking, cooking, air conditioning, and use of household chemicals. These sources emit various pollutants including carbon monoxide (CO), carbon dioxide (CO2), and semi-volatile organic compounds (SVOCs). On the other hand, outdoor pollutants emanate from various industrial, transportation, mining, and fuel burning sources. This releases pollutants such as particulate matter (PM), sulphur oxides (SOx), nitrogen oxides (NOx), ozone, and volatile organic compounds (VOCs).

The third type is related to the chemical nature and size of pollutants. They are divided into particulate matter and gaseous pollutants. Particulate matter represents very tiny particles in either a solid or liquid state. Usually, particulate matter is described according to its size, namely PM_{10}, $PM_{2.5}$, and $PM_{1.0}$. The smaller a particulate pollutant, the higher risks of its penetration into the human respiratory system and the higher chances for developing serious diseases. Gaseous pollutants represent chemicals in vapour form. They can mix with air relatively easily. Examples include sulphur oxides (SO_x), nitrogen oxides (NO_x), carbon monoxide (CO), ozone (O_3), and volatile organic compounds (VOCs).

Particulates, on the other hand, as depicted in Figure 2.1 below, form another category of pollutants in air filtration systems due to their ability to float in air for a long time and also be inhaled by

humans. As a result, mechanical filtration systems have been devised to ensure that such contaminants do not reach the human respiratory system. This is achieved by passing air through a filter whereby the air is filtered by ensuring that only clean air passes through while particles are left behind.

Regarding the current project, the schematic drawing above shows the significance of air purification in areas like underground mines whereby the miners are exposed to airborne particles such as dust particles, smoke, and also some toxic gases. In this regard, the negative ion generator system acts to reduce the airborne particles by purifying them through ionization and attraction. In this way, it becomes important to learn about pollutant categorization in order to select a suitable filtration system.

[5] A. C. Stern, Air Pollution Engineering Manual, McGraw Hill, 1994. The filtration process is based on various principles such as inertial impaction, interception, and diffusion. Inertial forces allow the capture of large-sized particles due to the collision of these particles with the filter fibres. On the other hand, diffusion enables the capture of smaller sized particles [6] H. C. Hinds, Aerosol Technology, Wiley-Inter science 1999. High Efficiency Particulate Air Filters (HEPA filters) are widely-used mechanical filters which can remove particulates as small as 0.3 micrometers with 99.97% efficiency [7] U.S. Environmental Protection Agency, Guide to Air Cleaners in the Home, EPA, 2018.

Advantages of Mechanical Filtration

1. High-efficiency particle removal
2. Rather popular technology
3. Effectively removes dust and smoke particles

Disadvantages of mechanical filtration

1. Necessity to replace the filters periodically
2. Resistance of air flow
3. Higher cost of operation and maintenance

2.2 Electrostatic Precipitation

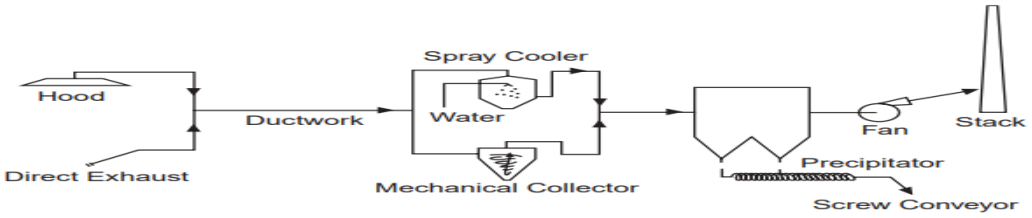

Figure 2.2: Diagram of Electrostatic Precipitator

Figure 2.2 presents the diagram of an electrostatic precipitator designed to remove particles from industrial exhausts. The basic components of this equipment include a hood, ductwork, spray cooler, mechanical collector, electrostatic precipitator device, fan, and stack. The polluted air first moves into the equipment through the hood and is then directed by the ductwork to the spray cooler, where the temperature of the gas is lowered. From the spray cooler, the air moves to the mechanical collector where large particles are filtered out before entering the electrostatic precipitator. Particles in the electrostatic precipitator are made electrically charged and collected using plates with opposite electrical charges.

These particles are collected using a screw conveyor system and disposed of. The cleaned air is finally vented using a fan and emitted into the atmosphere via a stack. The other way of removing particulates from air streams involves electrostatic precipitation technique. Electrostatic precipitators use electrical force to remove charged particles from moving gas streams. Electrostatic precipitator technology operates on the principle that charged particles can be removed from gas streams by using electric fields to attract them to oppositely charged collection plates [8] K. Parker, Applied Electrostatic Precipitation, Springer, 1997. These devices are made up of discharge electrodes and collection plates which are attached to a high-voltage source. Upon passing through the electrical field, the particles are charged and pulled towards the collection plates [9] B. O. Johansson, “Electrostatic precipitation in industrial applications,” Journal of Electrostatics, vol. 63, pp. 123–136, 2005. They are commonly used in industries such as power plants and cement plants.

Electrostatic precipitator advantages

1. Capacity to remove fine particles effectively
2. Low pressure drops when compared with filter
3. Capable of continuous operation

Electrostatic precipitator disadvantages

1. Complicated design
2. Necessitates cleaning of collecting plates periodically
3. Expensive to install initially

2.3 Ionization Technology

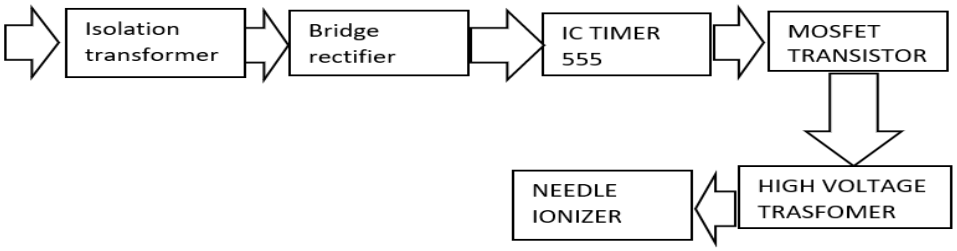

Figure 2.3: Diagrammatic representation of Ionization Technology

Figure 2.3 shows the process of operation of the Ionization Technology starts with the supply of AC electrical input to the isolation transformer. The isolation transformer safely transmits the electrical energy to the bridge rectifier stage, where AC input gets converted to DC input. The bridge rectifier DC input energizes the oscillator IC 555 circuit to produce square-wave switching signals.

These square-wave switching signals are fed into the MOSFET transistor and enable rapid switching of electrical current in the primary coil of the high-voltage transformer. Several kilovolts of voltage get produced by the high-voltage transformer and transmitted to the needle ionizer electrode. A high electric field generated by the needle produces corona effect producing negative ions. These negative ions get released into the air and mix up with pollutants and suspended particles in the air.

The negative ion generator resolves the problem of poor air quality in the mining industry by producing negatively-charged ions which neutralize pollutants in the atmosphere. The ionization technique involves production of charged ions in contact with air particulates. In this case, the negatively-charged ionizers produce negatively charged ions which bond with air particulates including dust, smoke, and micro-organisms [10] Park, "Air ionization technology for indoor air purification," Environmental Engineering Research, vol. 18, pp. 45-50, 2013.

Once the air particulates are charged, they form clumps and increase in weight, making them heavier and easier to fall down from the air column to the ground surface. This mechanism helps to reduce the number of particulates suspended in the atmosphere. Production of negative ions is carried out using high-voltage electric fields produced on pointed electrodes including needle ionizer. The intense electric field at the point of the electrode helps to charge air molecules to produce negative ions continuously [12] M. Krueger and R. Reed, "Biological impact of small air ions," Science, vol. 193, pp. 1209-1213, 1976.

Advantages of Ionization Technology

1. Lower power requirements
2. Compact design
3. No need to change filters
4. Smooth air cleaning process

Disadvantages of Ionization Technology

1. Ozone production may occur due to poor design
2. Does not work efficiently with large volume of air in industrial environment

Because of the low cost, easy design, and efficiency of operation, the ionization technology has been chosen to be utilized in the creation of the proposed negative ion generator system.

Figure 2.3 Components of the Proposed System Revisited

The proposed negative ion generator system comprises several stages of electronic devices to ensure the generation of high voltage that would lead to ionization of air. Every device serves a particular role in the whole system.

2.4 Isolation Transformer

Isolation transformers are used to provide electrical separation between the input source of power and the output voltage. In addition to the higher levels of safety and protection of electronic

components from electrical interference [13] S. Franco, Design with Operational Amplifiers and Analog Integrated Circuits, McGraw Hill, 2014. , the isolation transformers are able to step-down the input mains voltage to a suitable AC voltage for further rectification.

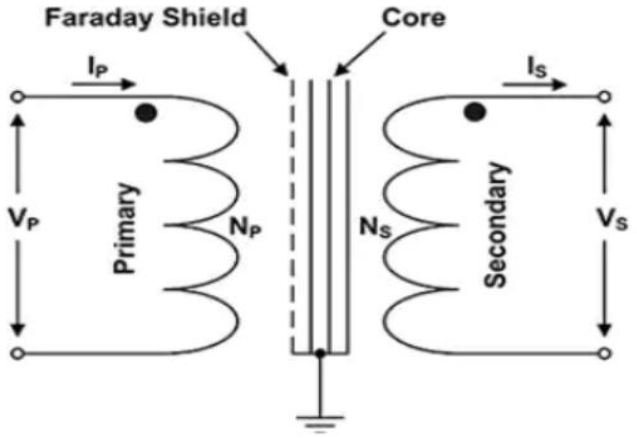

Figure 2.4 Isolation Transformer Theoretical Diagram

Figure 2.4 shows the theoretical diagram of the isolation transformer in the negative ion generator system is provided. It is an essential component of the power supply section due to its ability to offer electrical isolation between the AC mains and the circuitry of the air purification system. An isolation transformer contains two isolated windings known as the primary and secondary windings that are wound on a common core. The primary winding is fed from the AC mains supply and the secondary winding is used to feed the rectifier and other control circuitry of the system. However, although there exists magnetic coupling between the two windings, there is no electrical connection between them. During the process, the flow of alternating current in the primary winding generates a magnetic field within the transformer core. Based on Faraday's law of electromagnetic induction, this varying magnetic field induces voltage in the secondary winding. The transformer works based on the law of electromagnetic induction such that the output voltage is dependent on the turn's ratio of the primary and secondary windings. This relationship can be defined mathematically as follows:

$$VpVs=NpNs$$

Where:

1. Vs = Secondary voltage,
2. Vp = Primary voltage,
3. Ns = Number of turns in the secondary winding,

4. Np = Number of turns in the primary winding.

In this project, the isolation transformer ensures that the low voltage AC power is provided from the transformer to the bridge rectifier and oscillator circuits in the negative ion generator circuit system. It offers protection to the sensitive electronic parts as well as to the user from the high voltage supply in the main power line. The primary objective of electrical isolation is to prevent electrical shocks that can lead to serious injuries. The second benefit of electrical isolation is preventing short circuits in the electronic equipment from the main supply to spread throughout the electronic device. As there is no physical connection between the two, the transformer increases the safety performance of the entire system. In general, the core of the transformer consists of laminated soft iron or ferrite material. The primary winding is supplied by AC input and serves to convert electrical energy into magnetic energy in the transformer core. The secondary winding takes the magnetic energy and changes it back into electrical energy at the output voltage. In addition, the isolation transformer does the following tasks in the circuit:

1. Creates electrical isolation between AC mains and electronic circuits,
2. Lowers electrical noise and interference,
3. Better protection and safety of the circuit,
4. Produces appropriate voltage for rectification and regulation steps,
5. Protects sensitive parts against voltage peaks.

In the negative ion generator circuit, the output voltage isolated from AC mains through a transformer is applied to a bridge rectifier circuit that converts this AC voltage into a DC voltage needed by the oscillator stage, MOSFET switcher stage, and high voltage transformer. Therefore, the theoretical schematic in Figure 2.4 shows how an isolation transformer works and why it is crucial in negative ion generator air purifier.

Ion generator air purification system

2.5 Bridge Rectifier

The bridge rectifier changes the AC voltage to a DC voltage. The device utilizes four diodes configured in such a way that current flows in one direction irrespective of the polarity of the AC voltage [14] R. L. Boylestad and L. Nashelsky, Electronic Devices and Circuit Theory, Pearson, 2012 Full wave rectification is done by this circuit whereby both positive and negative halves of the input AC signal contribute to the production of DC voltage.

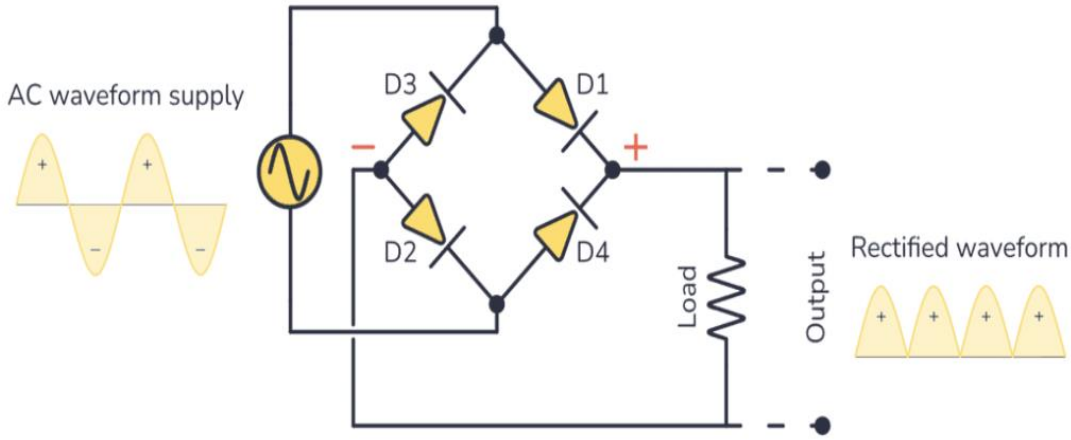

Figure 2.5 Bridge Rectifier Circuit Diagram Theory

As shown in Figure 2.5 above, the bridge rectifier circuit is composed of four diodes denoted by D1, D2, D3, and D4 respectively. A supply voltage is connected to the inputs of the circuit, while the output terminals have the load resistor RL connected across them. In the case of the positive half cycle of the AC supply voltage, the upper terminal becomes positive while the lower one becomes negative. With such polarization, diodes D1 and D4 become forward biased and hence conduct, while D2 and D3 remain reverse biased and do not conduct. The current flows through D1 into the load resistor (RL), then through D4 to complete the path, thus resulting in a positive voltage across the load resistor RL. Conversely, in the negative half cycle, the polarities at the terminals of the supply voltage get reversed. Here, the lower terminal becomes positive and the upper one negative. In such an instance, D2 and D3 get forward biased, D1 and D4 get reverse biased, and current flows from the load resistor in the same direction as was previously discussed. The DC obtained after the rectification process by a bridge rectifier is characterized by a pulsating waveform. Because both halves of the waveform are rectified, the rectified DC obtained is called a full-wave rectified DC since it takes advantage of the whole AC input waveform. Twice the frequency of the input AC source gives the frequency of the output signal. The output may be smoothed with capacitors to produce steady DC. Figure 2.5 represents the operation of a bridge rectifier consisting of four diodes used to convert AC into DC.

2.6 NE555 Timer Oscillator

The NE555 timer is among the widely used integrated circuits for generation of timing pulses and oscillations. These timers may be designed in monostable, bistable, and astable modes [15] F. M. Malvino and D. Bates, Electronic Principles, McGraw Hill, 2007. In this experiment, the NE555 timer is designed as an oscillator (astable multivibrator). An oscillator produces an oscillating

square wave that will help control the switching operation of transistor stages for the high voltage transformer.

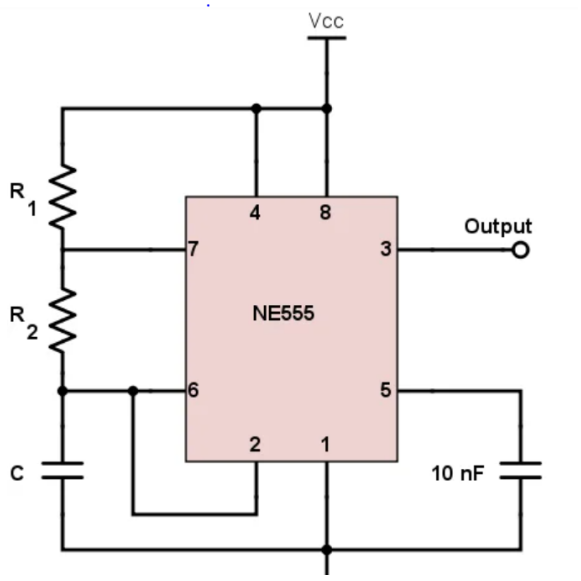

Figure 2.6 shows the theoretical diagram of the NE555 timer IC,

Figure 2.6 shows the theoretical diagram of the NE555 TIMER IC, which acts as the key pulse generating and oscillator IC in the negative ion generator circuit. The NE555 timer IC is an extremely reliable IC that is generally used for generating reliable time delays and oscillation pulses, which help drive the MOSFET switches in the high voltage transformer IC.

The NE555 timer IC comprises a number of internal ICs such as comparators, flip flops, discharge transistor, and voltage divider. All these ICs act as a team to produce stable square waves, depending on the RC circuit externally applied to the IC.

IC contains eight pins that serve different purposes in the functioning of the circuit:

1. Pin 1 (Ground): Refers to circuit ground.
2. Pin 2 (Trigger): Initiates timing sequence when the voltage falls below 1/3rd of the power supply voltage.
3. Pin 3 (Output): Produces square wave output for driving the MOSFET transistor.
4. Pin 4 (Reset): Resets the timer; usually connected to Vcc to prevent false triggering.
5. Pin 5 (Control Voltage): Used to set thresholds (generally used with a capacitor for noise reduction).
6. Pin 6 (Threshold): Supervises the voltage across capacitor, timing ends when voltage becomes more than 2/3rds of Vcc.
7. Pin 7 (Discharge): Discharges the capacitor used outside during the timing period.

8. Pin 8 (Vcc): Refers to the power supply voltage.

In this project, the NE555 timer is used in Astable mode. In this configuration, the timer will generate square waves continuously without any triggering from an external source. Continuous oscillations will allow us to provide switching pulses needed for the working of the MOSFET in the high voltage transformer circuit. The operating frequency depends on the value of the resistors and the capacitor attached to the IC. The oscillating frequency could be obtained by the following formula:

where:

f= 1.44/((R1+2R2C)

R1 is Timing resistor

R2is Fixed resistor

F is Operating frequency

The square wave obtained at Pin 3 of the timer is supplied to the gate terminal of the MOSFET. As a result, the MOSFET is turned ON/OFF continuously at high frequency. Such operation is needed for providing energy to the primary winding of the fly back transformer. When the MOSFET turns ON, electrical energy is stored in the magnetic field of the primary winding of the transformer. As soon as the MOSFET turns OFF, the stored energy in the magnetic field is released into the secondary winding resulting in obtaining high voltage output.

NE555 timer was chosen for this project for some reasons including:

1. A stable and reliable square wave generator,

2. Easy external circuitry configuration,

3. Variable frequency and duty cycle control,

4. Lower cost and availability,

5. Possibility to drive power switching elements.

The NE555 timer plays an important role in the negative ion generator because it generates continuous and stable pulses, which help produce high voltage output. The oscillating circuit

cannot be omitted here because it does not allow the transformer and the MOSFET switch to work efficiently. Thus, the schematic diagram of the circuit presented in Figure 2.6 reveals how the NE555 timer works as the pulse generator, making it possible for high voltage generation.

2.7 IRFP450 N Channel Mosfet Transistor Driver

IRFP450 N Channel Mosfet transistor acts as a driver stage that amplifies the signal generated by the NE555 oscillator. The amplification helps in ensuring that there is enough current required to switch on the power transistor stage effectively [16] P. Horowitz and W. Hill, The Art of Electronics, Cambridge University Press, 2015. The power transistor stage ensures proper functioning of switching on of the high-power transistor used in the system. IRFP450 N Channel Mosfet transistor is extensively used in power amplifiers and switch circuit applications. It can work at high current and power ratings, thus making it ideal to drive transformer loads [17] Vishay, "IRFP450 Power MOSFET," Vishay Intertechnology, In the current system design, IRFP450 N Channel Mosfet transistor is a switching element that controls the current through the primary coil of the high voltage transformer.

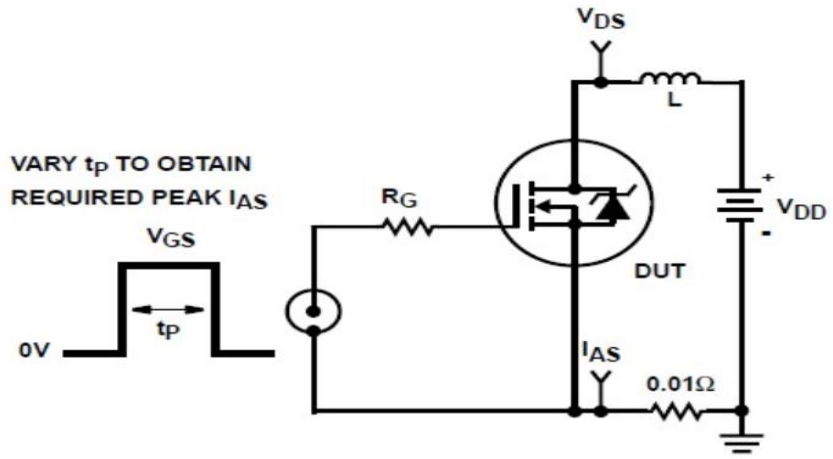

Figure 2.7 Theoretical Diagram of IRFP450 N Channel MOSFET Transistor

Figure 2.7 shows the theoretical diagram of the IRFP450 N-channel MOSFET transistor that forms part of the high voltage switching circuitry of the negative ion generator system. The MOSFET

transistor is an electronic switching component whose major function is to control the flow of current through the primary coil of the fly back transformer.

IRFP450 is a power MOSFET transistor that is mainly used in applications requiring high voltages and fast switching speeds. It comprises three main terminals which are referred to as the Gate (G), Drain (D), and Source (S). Different roles are played by these three terminals in the operation of the transistor. The gate terminal acts as the switching terminal of the MOSFET transistor. A small amount of voltage between the gate and source controls ON/OFF operation of the transistor.

The drain terminal becomes the input current terminal, which is attached to the primary coil of the transformer, while the source terminal is connected to the ground. The working principle of the MOSFET is based on its capability to act like an electronic switch. In case there is enough positive voltage applied to the gate terminal compared to that of the source terminal, the electric field will appear within the structure of the semiconductor. With the presence of such electric field, the conductive channel appears between the drain and source terminals, through which current starts flowing in the transistor. When no voltage is applied to the gate, the conductive channel is eliminated.

The operational state of the MOSFET can be described as:

GS>VTH

Where

1. GS= Gate-to-source voltage,

2. TH= Threshold voltage required to turn ON the MOSFET.

If the condition holds true, then the MOSFET starts conducting current. Otherwise, the MOSFET stays in an off position. In this project, the IRFP450 MOSFET is operated with the help of an oscillator that produces high frequency switching signals. As a result, the MOSFET turns on and off rapidly. In doing so, a change in current in the primary windings of the transformer causes magnetic flux within the core. Due to the principle of electromagnetic induction, a large amount of voltage is induced in the secondary coil. Consequently, the fly back transformer boosts the lower

input voltage of about 9 to 12 volts to a much higher output voltage of 15kV needed by the needle ionizer.

The choice of IRFP450 MOSFET for this project is due to its desirable electrical properties, namely:

1. High voltage rating,
2. Fast switching,
3. Low power loss,
4. Large current flow,
5. Efficiency at high frequency,
6. Reliability of switching.

Also, the use of this device helps increase efficiency due to low internal resistance during conduction, which decreases power losses and overheating of the circuit. In the scheme, the drain is connected to the primary coil of the transformer, while the source is grounded. The gate is supplied with switching impulses from an oscillator. Such an installation allows the switching of currents in the transformer. During operation,

The MOSFET is continually turned on and off to enable the formation and breakdown of magnetic flux within the core of the transformer. It is through this process that the high voltage necessary for the corona discharge and formation of negative ions is obtained. Hence, the theoretical model in figure 2.6 shows the working principle of the IRFP450 N-channel MOSFET transistor in producing high voltages.

2.8 High Voltage Transformer

A high voltage transformer plays a significant role in boosting the supply voltage to some kilovolts in order to initiate the process of ionization of air molecules. The principle behind the operation of the high voltage transformer is electromagnetic induction where the alternating current passing through the primary winding produces a fluctuating magnetic field within the transformer core. The fluctuating magnetic field within the transformer core induces a high voltage in the secondary winding. The resulting high voltage enables a high electric field to be created around the needle ionizer for effective creation of corona discharge. The high voltage transformer used in the current project is a fly back transformer that is designed for high frequency operations. Fly back transformers have become popular transformers due to their ability to produce high voltage outputs with low DC inputs. The transformer receives pulse switching inputs from the MOSFET driver circuit which result into fluctuation of the magnetic field inside the transformer ferrite core.

In normal atmospheric conditions, the breakdown voltage for air is roughly:

$E \approx 3 \times 10^6$ V/m

Thus, 3 kV would be needed to create a spark for a gap in air of 1 mm.

Spark Gap Principle

Spark gap measurement is based on the principle that the distance between two metal electrodes attached to the high-voltage terminal of the transformer is varied until a discharge takes place. At the point where the breakdown voltage exceeds the insulation strength of air, a spark discharge will take place between the two electrodes.

Breakdown voltage can be expressed as a function of spark gap distance with the following approximation:

V = Breakdown voltage (V)

E = Dielectric strength of air (3×10^6 V/m)

d = Spark gap distance (m)

Output Voltage of 15 kV

In order to determine the voltage across the output of the transformer, two metallic electrodes were used to connect the transformer outputs. The separation distance between the two electrodes was increased till a stable spark discharge was achieved.

For the distance between sparks measured as follows:

d = 5 mm = 0.005 m

Then the output voltage can be approximated as:

$$V = (3 \times 10^6)\ (0.005)$$

$$V = 15000\ V$$

Hence: $V \approx 15\ kV$

The voltage required for generating the sparks across electrodes was achieved through the fly back transformer.

Relevance of the Spark Gap Technique

Spark gap technique was adopted in the present experiment owing to the following reasons:

1. Relatively easy and cheap high voltage estimation procedure
2. It does not need sophisticated and expensive instruments for measuring high voltages
3. Usable with fly back transformers
4. Vivid demonstration of high voltage generation
5. Often adopted in laboratory experiments on high voltages

Precautions for Safe Measurement

In view of the presence of very high voltage from the fly back transformer, the following precautions have been taken while performing measurement through spark gap technique:

1.Insulation of all exposed electrical conductors

2.Utilization of insulated testing tools

3.Ensuring adequate safe distances

4.Avoiding physical contact with output connections

5.Measurement in dry surroundings

6.Turning off voltage supply during adjustment of electrode separation

The spark gap technique was successfully applied to test the high voltage output of the flyback transformer that will be incorporated into the proposed negative ion generation system. The voltage output was measured by determining the spark gap formed by two electrodes and was found to be around 15 kV. The voltage output generated can effectively create corona discharge by the needle ionizer to produce negative ions necessary for purifying mining air. [18] Khaled Elshafey Design Engineer https://www.we-online.com. The high voltage output is necessary to form an electric field at the needle ionizer.

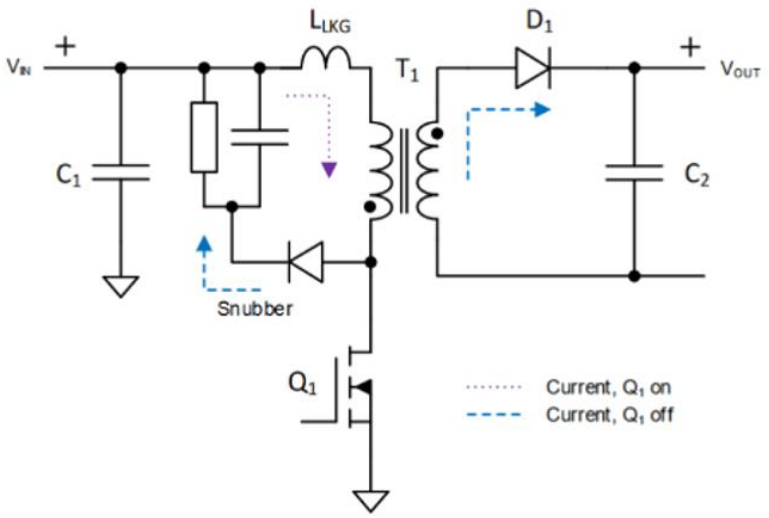

Figure 2.8 Theoretical Circuit of the High Voltage Transformer

The diagram in Figure 2.8 shows the theoretical circuitry for the high voltage transformer section in the negative ion generator circuit. The high voltage transformer section is the major power conversion part of the circuit, where a low input DC voltage is converted into a high voltage output AC pulse that is later rectified for use in supplying power to the needle ionizer during air ionization process. The circuit works on high frequency switching mode whereby the switching of MOSFET transistor that is placed on the primary side of the transformer is made. MOSFET transistor acts like an electronic switch and it turns ON/OFF very fast upon receiving gate pulses from IC 555 timer oscillation circuit.

Operation of MOSFET in Switching at Primary Side

At the primary side, the switching of the MOSFET transistor in controlling the current passing through it happens under two switching operations: In case the MOSFET is switched ON, the current passes through the primary coil winding of the transformer. This results in storage of energy in the transformer core in terms of a magnetic field. Current continues rising in response to the inductance in the primary coil and the supplied voltages. However, in case of MOSFET being switched OFF, the current in the primary winding stops instantaneously. As a result of this, the magnetic field collapses, causing high voltage pulses in both primary and secondary windings of the transformer. Secondary winding further increases the voltage induced across the windings. The

above-mentioned two switch operations form the basic principle of operation for flyback transformers.

Protection of the MOSFET Transistor with Snubber Circuit

A snubber circuit should always be included in the power circuitry to protect the MOSFET transistor from any damage. The snubber circuit usually includes a resistor, capacitor, and diode.

The basic purposes of using a snubber circuit include:

1. Suppressing voltage spikes created during switching

2. Providing avalanche breakdown protection for the MOSFET

3. Reducing electromagnetic interference in the system

4. Ensuring smooth switching operations

Without the snubber circuit, the MOSFET transistor will suffer damaging transient voltage stresses because of the leakage inductance of the transformer.

High-Voltage Transformation Process

The transformation process of the transformer in figure 2.8 is based on the concept of electromagnetic induction. When there are frequent switches of the MOSFET, energy is constantly transferred back and forth within the transformer. Since the second coil of wire contains many more turns than the first one, this results in a very high increase of voltage. Thus, in this way, it can generate a very high voltage output (about 15 kV), which is employed by the other processes involved in producing ions using the needle ionizer. This process is demonstrated by figure 2.7, in which the process of switching and energy transmission from the transformer along with snubber circuitry are illustrated.

2.9 Needle Ionizer

The needle ionizer serves as the last component of the negative ion generator system. The component is a needle-shaped metallic electrode that is connected to the output terminal providing high voltage. With a needle's pointed shape, there will be a stronger electric field present in the tip. This electric field will help in the creation of negative ions, which will diffuse in the surroundings and adhere to floating particles [19] 2011-06-222012-12-27 Koninklijke Philips Electronics N.V.A cleaning device for cleaning the air-ionizing

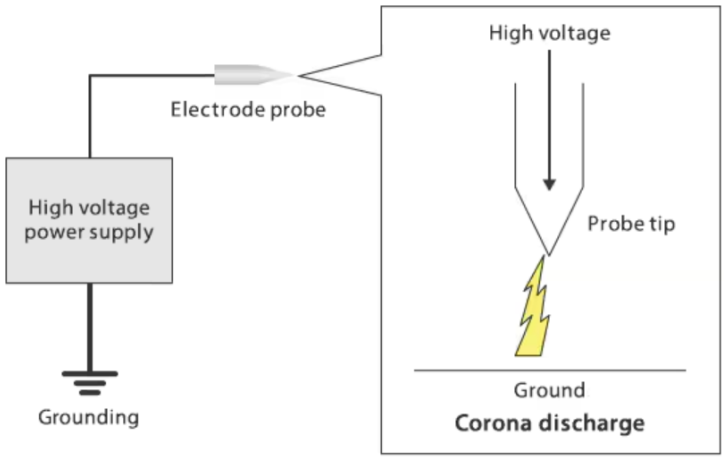

Figure 2.9 Theoretical Arrangement of Needle Ionizer

Figure 2.9 shows the theoretical arrangement and principle of operation of the needle ionizer that generates the negative ions in the air purification unit. The needle ionizer is a critical part of the system since its role is to produce negative ions using the corona discharge method.

The theoretical arrangement of this section includes a needle-shaped electrode connected to the output of the fly back transformer, and another collecting or grounded surface placed at a certain distance away from the needle tip. Once the high voltage passes across the needle-shaped electrode, an electric field is created in the vicinity of the needle. This type of electrode is usually designed such that the tip is very sharp because the electric field becomes extremely intense in areas with sharp conducting surfaces. Therefore, due to the creation of a high-intensity electric field, the air molecules in proximity become ionized once the voltage reaches the breakdown limit of the air.

When running, the high voltage transformer provides about 15 kV to the needle electrode. The strong electrical field creates an acceleration for the free electrons that exist in the air. The electrons will strike the oxygen and nitrogen molecules resulting in the formation of charged air molecules. This phenomenon leads to the production of other free electrons that will bond with oxygen molecules to generate negative oxygen ions, as shown:

$$O2+e^{-}\rightarrow O2^{-}$$

1. O2 denotes oxygen molecules,

2. e^-+e− refers to free electrons,

3. -O2− signifies negative oxygen ions.

With continuous ionization, a corona discharge zone will be formed near the needle point. Corona discharges usually appear as a faint blue colour near the needle electrodes. This occurs due to the emission of light energy by the excited air molecules.Corona discharge created at the tip of the needle is called a non-thermal plasma because the ionization takes place without any heating of the medium. This ensures that ions are produced continuously without wasting much energy or causing harm to the electrodes. Probe tip generating negative ion corona discharge

2.9.0 Conclusion

In this chapter, a literature review on several techniques of air purification was conducted and included such types as mechanical filters, electrostatic precipitators, and ionizers. The strengths and weaknesses of all the approaches were mentioned and the ionization approach was chosen for use in the system due to its low power consumption, small size, and simple design. In addition to the above, the literature review on the theoretical principles of operation of all the components of the designed system has been provided and includes an isolation transformer, bridge rectifier, NE555 timer oscillator, transistor driver stage, high voltage transformer,

CHAPTER 3: SYSTEM DESIGN

3.0 Introduction

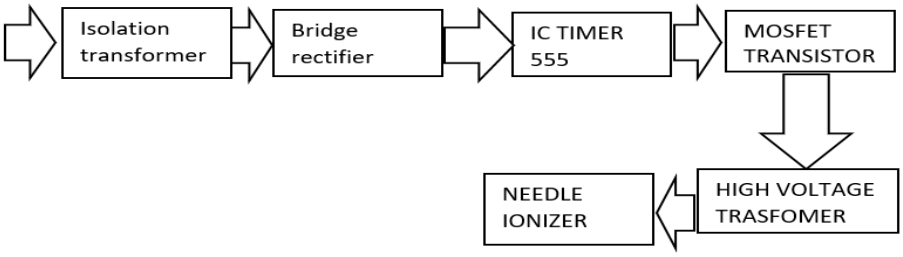

Figure 3.0 Block Diagram of Negative Ion Generator

Figure 3.0 shows design of the negative ion generator system that will be used for air purification in mining environments. The negative ion generator system will transform AC power from source which is at low voltage to DC power at high voltage for ions generation. The system will comprise isolation transformer, bridge rectifier, filtering, oscillator, switching and high voltage generation blocks.

3.1 Isolation Transformer Design

The isolation transformer works by reducing the voltage of the main supply from 220 V AC to a much safer level of 12 V AC. This transformer gives electrical isolation between the power and control circuits. This increases safety and also lowers electrical noise. The negative ion generator system plays a very vital role in designing an isolation transformer. It helps in isolating the high voltage electric power supply from the low voltage electronics. This is done so that it becomes more safer and also protects the electronic equipment. The objective of the isolation transformer is to reduce the voltage of the mains supply which is at a single phase of 220VAC to a lower voltage of 12 V AC.

Design Specifications

Some design specification for the isolation transformer are stated below

1. Primary voltage, V1 = 220V AC

2. Secondary voltage, V2 =12V AC

3. Source Frequency =50Hz

4. Transformer rating =36AV

5. The isolation transformer is a single-phase isolation transformer.

The core material used is Laminated Silicon steel.

Operating principle

The operation of isolation transformer takes place through the principle of mutual induction. When AC voltage is applied to the primary coil, the AC flux will be generated in the core of transformer. This flux will induce AC voltage in secondary coil. Since there is no direct connection between both the coils, hence there will be complete electrical isolation between them which makes system safer from any electrical hazards.

Relationship between Voltage, Turns Ratio

The relationship between voltage and turns ratio between the primary and secondary is given by:

Vp/Vs = Np/Ns

Vp = represents primary voltage

Vs = represents secondary voltage

Np= represents number of primary turns

Ns= represents number of secondary turns

Calculation of Turns Ratio

It has been stated that

$$Vp = 220v$$

$$Vs = 12v$$

$$Np/Ns = 220 / 12 = 18.33$$

Hence, the transformer will be constructed on the basis of a turn's ratio of 18.33:1 primary to secondary.

Power Rating of Transformer

Power rating of transformer is given by:

$$Ps = Vs \times Is$$

$$Ps = 12 \times 3 = 36\ VA$$

To factor in losses, a transformer having a power rating above 36VA is used.

Current Ratio Calculation

Secondary current (I2) =3A

Primary current (I1) = Pp / Vp

Pp = 36

I1 = 36 / 220 = 0.164A

Insulation and Safety Specifications

These are the safety specifications that were considered while designing the transformer:

1. High quality insulating materials

2. Sufficient spacing of windings

3. Earthing of the core of the transformer

4. Adequate ventilation for avoiding over heating

5. Isolation Transformer Simulation

Isolation Transformer was simulated using the circuit simulation software.

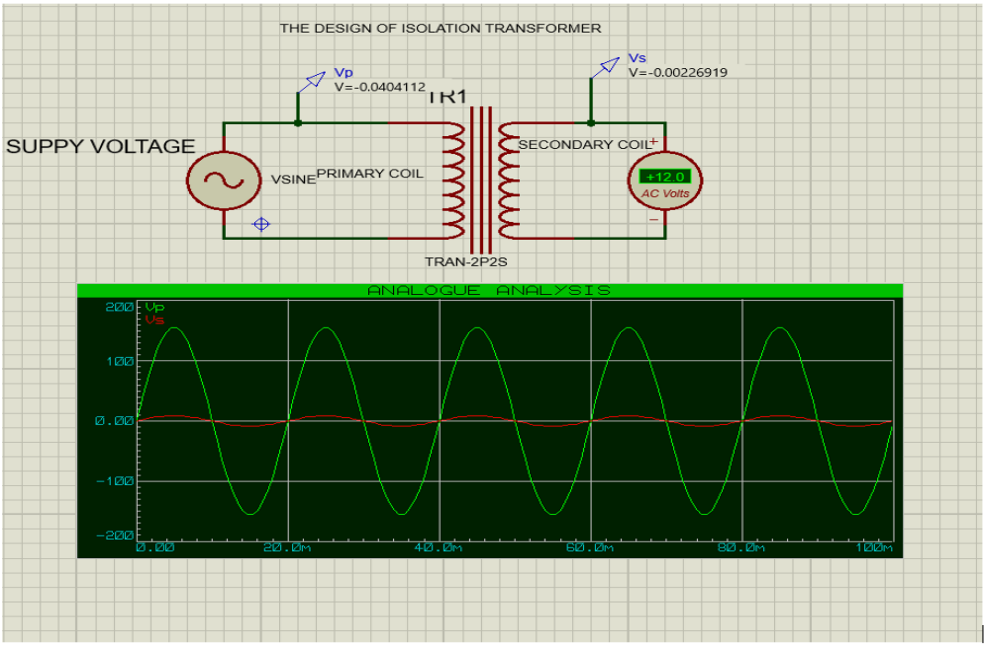

Figure 3.1 Design and Simulation of Isolation Transformer Circuit

Figure 3.1 shows the design and simulation results of the isolation transformer, the green line on the graph shows the 220 AC supply voltage and the red line on the graph shows the completely step-down voltage to 12v used to safely step mains supply before rectification. An isolation

transformer electrically isolates the power source from the electronic circuit that uses it by ensuring good insulation, thus enhancing safety in the design process. The transformer successfully steps down the voltage from 240 V AC on the primary side to 12 V AC on the secondary side as per the simulation results.

3.2 Bridge Rectifier Design

A bridge rectifier circuit is designed for converting the AC voltage output by an isolation transformer into a regulated DC voltage to supply power to the negative ion generator circuit. This is vital since the ion generation circuit needs a regulated DC voltage supply in order to facilitate efficient switching at high voltages and produce negative ions.

The components used include an isolation transformer, a full wave bridge rectifier with ratings of 15 A and 1000V, and a smoothing capacitor filter.

The design specifications for the rectifier circuit include:

1. Input Supply: 220 V AC, 50 Hz

2. Transformer Secondary Voltage: 12 V AC

3. Output Voltage: 11.5 V DC Approx.

4. Maximum Load Current: 3 A

5. Rectifier Rating: 15A, 1000V

6. Filter Capacitor: 1000µF, 40 V

Purpose of the Bridge Rectifier Circuit

The primary function of the bridge rectifier circuit is to change the alternating current voltage received from the transformer to pulsating direct current voltage.

This is done using four diodes which are placed in a bridge formation and which allows current during both positive and negative half-cycles of the input AC voltage.

This makes the rectifier much more efficient compared to other types like half-wave rectifiers.

Operation of the Bridge Rectifier

During operation:

1. During the positive half-cycle of the input AC, two diodes conduct and let current pass in one direction.

2. During the negative half-cycle, two other diodes conduct and still let the current flow in the same direction.

This leads to full-wave rectification of the voltage.

After the bridge rectification stage, the voltage passes through a capacitor filter of 1000µF, which smoothens the pulsating DC voltage.

Calculation of Peak Voltage

The calculation of the peak voltage of the secondary transformer is done as follows:

$$V_{peak} = V_{rms} \times \sqrt{2}$$

$$V_{peak} = 12 \times 1.414 = 16.97 \text{ V}$$

Calculation of the rectified DC Voltage

In case of a bridge rectifier, there are two diodes conducting in each half-cycle. For silicon diodes,

Voltage drop in diode=0.7 V

Total drop in two diodes V(DC)practical =1.4 V

Therefore, the DC output voltage

$$V_{dc} = V_{peak} - V_{drop}$$

=(17V) - (1.4V)

=15.6 V

But after filtering the practical output is 14V

Capacitor Filter

A capacitor filter is added across the rectifier to smoothen out the output.

Capacitor specifications:

Capacitance: 1000 μF

Voltage rating: 40V

The capacitance gets charged to the peak rectified voltage but discharges slowly through the load.

Ripple Voltage

The ripple voltage in case of full wave rectification with a capacitor filter is given by:

$V_{ripple} = I_{load} / (f \times C)$

Where, I, load = 15 A

f = 100 Hz

C = 1000 μF = 0.001 F

Vripple = voltage

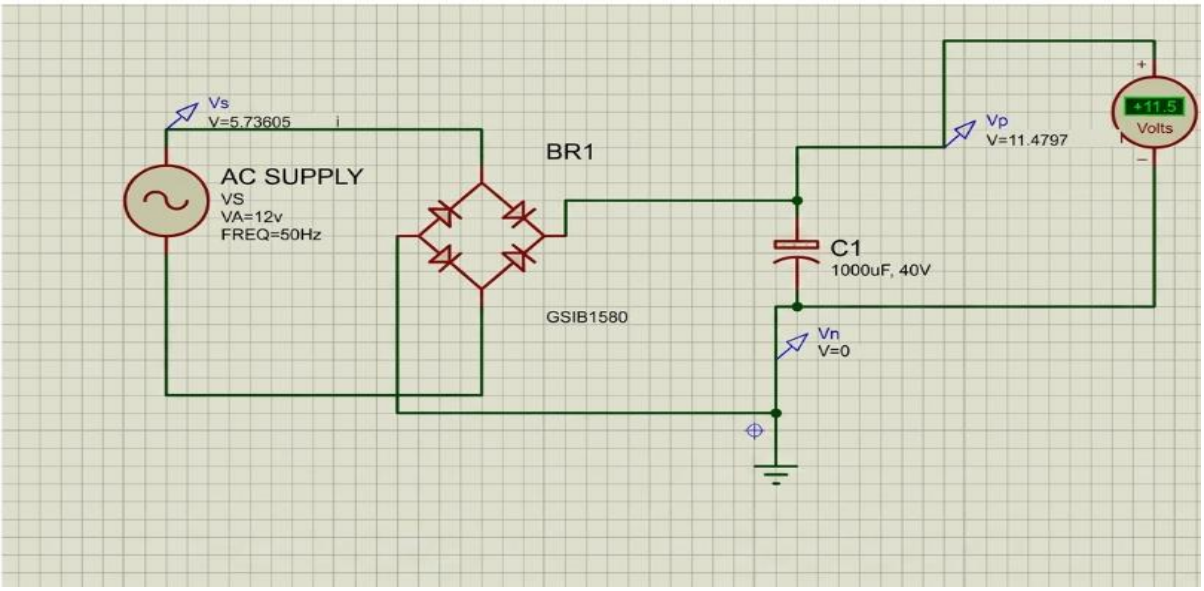

Figure 3.2 Bridge rectifier circuit design

Figure 3.2 represents a simulated bridge rectifier circuit designed by means of Proteus software. It comprises an AC voltage supply source, full-wave bridge rectifier and a filter capacitor that acts across the output terminals of the circuit. Here, the AC input voltage given to the rectifier is 12 V RMS at a frequency of 50Hz. The function of a bridge rectifier is converting the AC supply voltage into pulsating DC voltage; however, the filter capacitor smoothers the rectified output voltages to generate a DC voltage required to operate the negative ion generator circuit.

Figure 3.2 Dc voltmeter connected at the output section shows 11.5V In Figure 3.2, the DC voltage 11.5V is measured at the output section, which indicates that rectification is completed successfully as both negative and positive half-cycles of an AC supply are converted into pulsating DC voltages. The filter capacitor reduces the ripple voltage from the output terminal.

Simulation parameters

1. AC source voltage = 12 V RMS

2. Supply frequency = 50 Hz

3. Bridge rectifier rating = 15 A, 1000 V

4. Filter capacitor = 1000 µF, 40 V

5. Rectified DC output voltage ≈ 11.5 V

6. Load current capacity = 15 A

Simulation findings shown in Figure 3.2 show that the bridge rectifier works efficiently. The rectified output voltage is about 14 VDC after passing through the filter stage. The voltage is adequate enough to power the NE555 timer oscillator as well as the MOSFET switching sections of the negative ion generator device.

It can be noted from the simulation findings that the capacitor filter is very efficient in reducing the ripple voltage, thus ensuring voltage stability and effective operation of the electrical circuits.

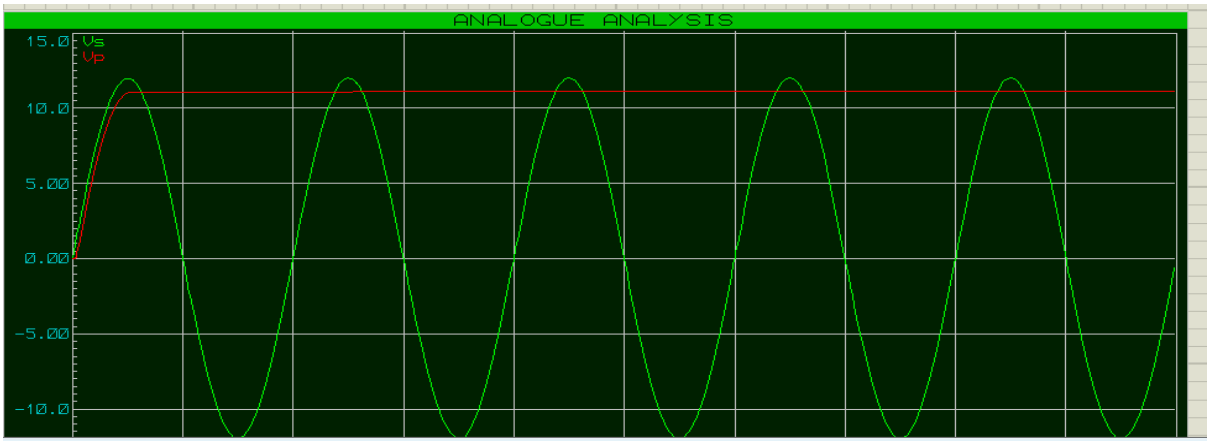

Figure 3.2 Bridge Rectifier Analysis

Figure 3.2 shows the Simulation results of the bridge rectifier circuit obtained through Proteus simulation software is displayed in figure 3.2. The figure displays both waveforms of the AC input and the DC output waveforms obtained through the rectification and filtering process. The waveform shown in green colour is referred to as Vs and depicts the AC input voltage received by the bridge rectifier circuit from the transformer. On the other hand, the waveform shown in red colour and libelled Vp is the output DC voltage obtained through the bridge rectification. The alternating voltage applied to the bridge rectifier circuit was 12VAC at a frequency of 50Hz. However, after converting and filtering through the capacitor, the output voltage rose to 11.5V DC

because of voltage peaks conversion and filtering actions of the capacitor. As indicated in figure 3.2, the waveform displayed in green colour indicates the presence of alternating current in the input side of the rectifier circuit. The red-coloured waveform almost resembles a straight line indicating the ability of the bridge rectifier and filter capacitor in converting the AC signal to DC voltage.

The simulation results confirm the following observations:

1. Full-wave rectification was successfully achieved.

2. Both positive and negative half cycles of the AC waveform were utilized.

3. The capacitor filter reduced ripple voltage significantly.

4. The rectified output voltage remained approximately constant at 11.5V DC.

5. The output voltage obtained is suitable for operation of the negative ion generator circuit

Hence, the simulation shows that the theory behind the calculation is correct. It proves that the DC supply provided by the rectifier circuit can be steady and enough to run the negative ion generator system.

3.3 Design of the NE555 Timer Circuit

The NE555 timer IC is utilized in this project for producing pulses in the negative ion generator system. The timer works in a stable state to generate a steady square wave. The output waveform will be used to switch the transistor, which in turn will energize the primary winding of a step-up transformer in order to create high voltage. The NE555 timer IC was chosen since it is simple to use, reliable, widely available, and can work in a wide range of voltages.

Design Requirements

1. The timer circuit was designed to meet the following requirements:
2. Operate from a 12 V to 14 V DC power supply

3. Generate a continuous square wave signal
4. Provide near-symmetrical duty cycle

Produce a stable oscillation frequency suitable for transformer switching

Deliver sufficient output drive to the transistor stage

Selected Component Values (Design Calculations) The component values for the astable configuration of the 555 Timer IC were determined using standard design equations. All resistor values were obtained through calculation based on the required operating frequency.

Frequency Equation

For a 555-timer operating in astable mode:

$f = 1.44 / ((R1 + RV + 2R2) C)$

where R1= Fixed resistor

RV= Variable resistor

C = capacitor

R2= Timing resistor

Design Requirements

Target frequency:

$f \approx 40$ kHz

Selected capacitor:

C = 1 nF

Calculation of Total Resistance

Rearranging the frequency equation:

$R1 + RV + 2R2 = 1.44 / (fC)$

Substituting values

$$R1+RV+2R2=1.44/(40\times10^{3}\times1\times10^{-9})$$
$$R1+RV+2R2=1.44/(40\times10^{-6})$$
$$R1 + RV + 2R2 = 36\ k\Omega$$

Selection of Resistor Values

A standard value was selected: $R2 = 10\ k\Omega$

Substituting into the equation:

$$R1+RV+2(10k)=36k$$
$$R1+RV+20k=36k$$
$$R1 + RV = 16\ k\Omega$$

A fixed resistor was chosen:

$$R1 = 15\ k\Omega$$

Therefore, the remaining value is adjusted using a variable resistor:

$$RV = 0 – 50\ k\Omega$$

This allows practical tuning around the calculated value.

Frequency Verification

Maximum Frequency (RV = 0)

$$F_{max}=1.44/((15k+0+2\times10k)(1nF))$$
$$F_{max}=1.44/(35k\times1nF)$$
$$F_{max} \approx 41.1\ kHz$$

Minimum Frequency (RV = 50k)

$$F_{min}=1.44/((15k+50k+2\times10k)\ (1nF))$$
$$F_{min}=1.44/(85k\times1nF)$$
$$F_{min} \approx 16.9\ kHz$$

Duty Cycle The duty cycle (D) is defined as the ratio of the output HIGH time to the total period of one cycle:

$$D = T\ high / T\ total$$

For a 555 astable circuit: $D = (R1 + RV + R2) / (R1 + RV + 2R2)$

Maximum Duty Cycle (RV = 50k)

$$D=(15k+50k+10k)/(15k+50k+20k)$$
$$D=75k/85k$$
$$D \approx 0.88= 88\%$$

Minimum Duty Cycle (RV = 0)

$$D=(15k+0+10k)/(15k0+20k)$$
$$D=25k/35k$$
$$D \approx 0.71= 71\%$$

Base Resistor (R3)

The base resistor was calculated to limit current into the transistor:

$$R3 = (VCC - VBE) / IB$$

Assuming:

$$VCC \approx 14V$$

$$VBE \approx 0.7$$

$$IB \approx 0.3\ A$$

$$R3 = (14 - 0.7) / 0.3$$

$$RB \approx 13.3 / 0.3 \approx 44\ \Omega$$

A standard value was selected: $R3 = 47\ \Omega$

All resistor values have been determined using standard design formulas and verified by calculation. The circuit works within the frequency range of 16.9 kHz to 41.1 kHz with a duty cycle of 71% to 88%.

Principle of Operation Astable Mode

When operating in astable mode, the NE555 generates an output that continuously oscillates without any external triggering. The time interval capacitor will keep charging and discharging at intervals of one-third and two-thirds of the supply voltage.

During operation:

1. The capacitor charges through $R_1$and R_2.
2. The capacitor discharges through R_2only.
3. This charging and discharging cycle determine the output frequency and duty cycle.

The standard equations governing a stable operation are:

$$f = \frac{1.44}{(R_1 + 2R_2)C}$$

$$T_H = 0.693(R_1 + R_2)C$$

$$T_L = 0.693(R_2)C$$

$$D = \frac{R_1 + R_2}{R_1 + 2R_2}$$

Design Calculations

Step 1: Capacitor Conversion

$$C = 1nF$$

$$C = 1 \times nF$$

$$C = 1 \times 10^{-9}F$$

$$C = 1nF$$

Step 2: Frequency Determination

$$R_1 + 2R_2 = 10k + 2(15k)$$

$$= 10k + 30k$$

$$= 40k\Omega$$

Substituting into the frequency formula:

$$f = \frac{1.44}{(40{,}000)(1 \times 10^{-9})}$$

$$\text{f} \approx 36\text{kHz}$$

Therefore, the timer operates at approximately:

$$\text{f} \approx 36\text{kHz}$$

Step 3: High and Low Time Calculation

High time:

$$T_H = 0.693(R_1 + R_2)C$$
$$T_H = 0.693(40)(1 \times 10^{-9})$$
$$T_H = 0.27\,ms$$

Low time:

$$T_L = 0.693(15{,}000)(1 \times 10^{-9})$$
$$T_L = 0.1ms$$

Total period:

$$T = T_H + T_L$$
$$T = 0.37\,ms$$

This confirms the calculated operating frequency of approximately 36MHz.

Step 4: Duty Cycle

$$D = \frac{T_H}{T}$$
$$D = \frac{0.27}{0.37}$$
$$D \approx 73\%$$

Transistor Drive Consideration

The base resistor $R_3 = 47\Omega$ limits the current flowing into the transistor base.

$$I_B = \frac{V_{out} - V_{BE}}{R_3}$$
$$I_B = \frac{14 - 0.7}{47}$$
$$I_B \approx 0.28\,mA$$

This base current is adequate to drive the switching transistor into saturation.

The resistor $R_4 = 47\Omega$ provides additional output protection and current limiting to safeguard the NE555 output stage.

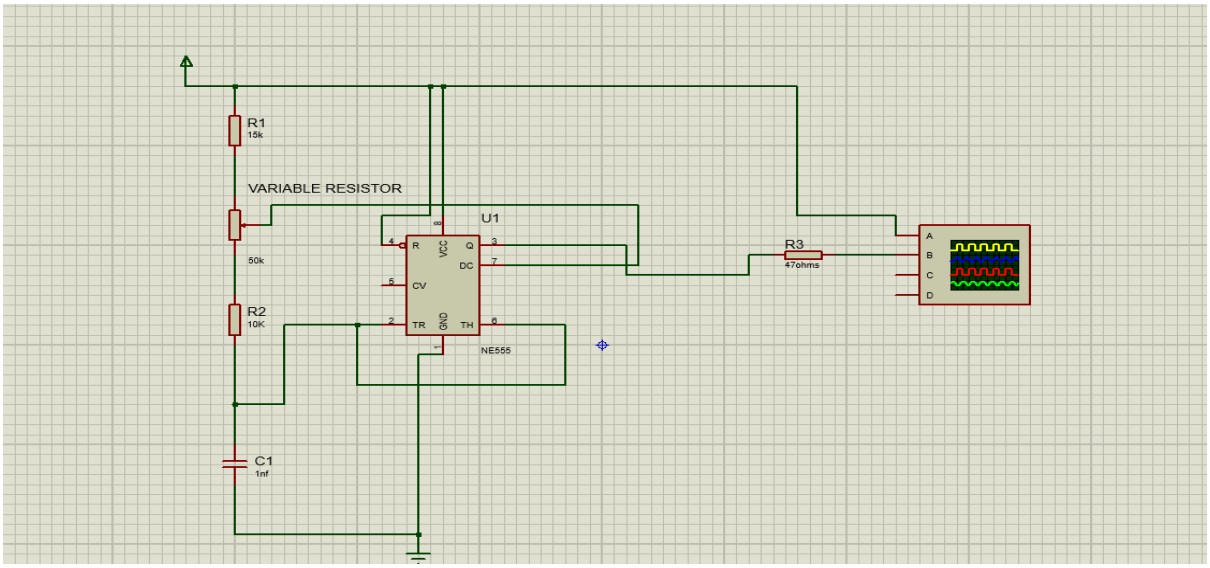

Figure 3.3 Circuit Design and Simulation in Proteus

Figure 3.3 provides a complete simulation of the Astable circuit of the 555 Timer IC performed on the Proteus software platform. This astable circuit will be designed with the aid of a 555 timer and a 14 V DC source power. In the circuit, the time control section utilizes three resistors; one has a value of 15kΩ, the second one is a 10kΩ resistor, and the third resistor has a value of 50kΩ that is variable in nature. Also included is a capacitor with a rating of 1nF.The output signal is obtained from pin 3 of the 555 timer, which is viewed with the help of the virtual oscilloscope in Proteus, and the output stage has a 47 ohms resistor used to regulate the current for the purpose of protecting the driving stage. The working of the circuit depends on the continuous charging and discharging of the capacitor. Whenever the output is high, the capacitor starts to charge through the resistive elements until the upper threshold level is reached, which is equal to 2/3 times the power supply voltage. At that point, the internal comparator switches off the output and makes it low, thus causing the capacitor to start discharging. This cycle ensures the oscillation that happens without the need for an external clock signal. The addition of the resistor helps change the value

of resistance in the timing path, and hence affect the capacitor's rate of charging and discharging. It is thus possible to change the frequency of the output wave during simulation and see the effects of resistance on the waveform produced. Higher values of resistance cause a lower frequency and vice versa. The waveform shown in Figure 3.3 shows correct functioning of the astable configuration, since it provides continuous oscillations in the form of square waves. From the theoretical study of the design, it can be seen that the frequency depends on the value of RC time constant. Therefore,

the Proteus simulation has confirmed the theoretical study by proving stable oscillation and varying frequency of the output.

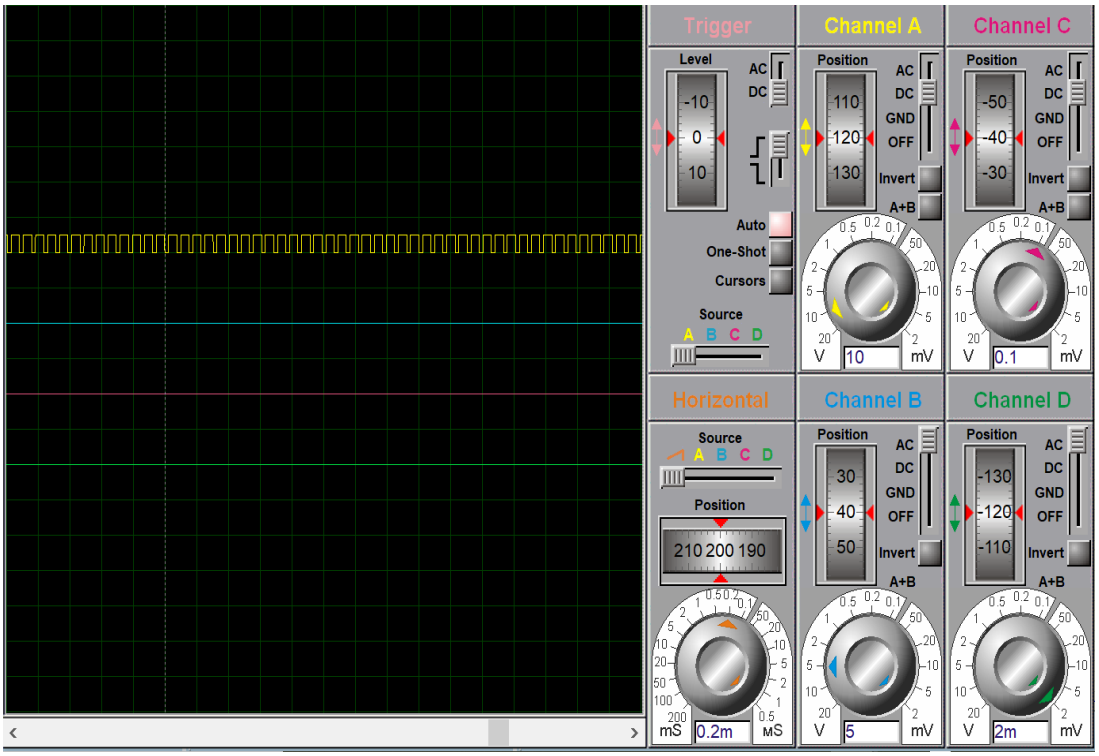

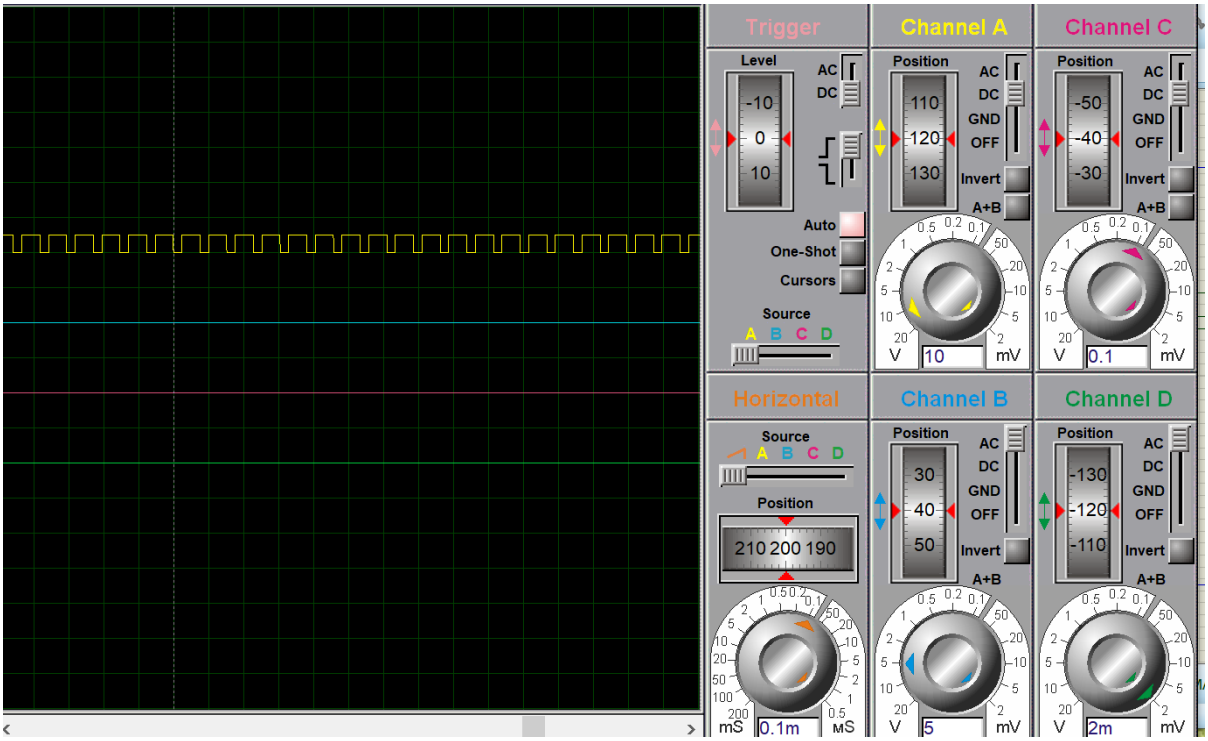

Figure 3.3 NE555 Timer Design Circuit and Simulation Results

Figure 3.3 displays the output waveform of the NE555 timer as captured on the oscilloscope. The oscilloscope captures a waveform that exhibits a square wave signal, where one can see the periodic transitions of voltage levels from low to high. The square wave pattern in Figure 3.3 verifies that the circuit is functioning in the astable mode. The oscilloscope is utilized in the simulation to capture the signal waveforms of the NE555 timer.

The output wave pattern in Figure 3.3 is a representation of a stable square wave pattern which indicates astable mode operation of the circuit. The time parameter is plotted on the horizontal axis while voltage is plotted on the vertical axis. Some of the important parameters which can be verified from the oscilloscope wave pattern include frequency, high-time, and low-time. The frequency can be determined from the consistent interval between the pulse widths of the wave pattern.

Parameter	Calculated value	Simulated value
Frequency	36kHz	36kHz
High time	0.27ms	0.1ms
Low time	0.1ms	0.1ms
Duty cycle	73%	72.9%

Table 3.3 Comparison of calculated and simulated NE555 timer parameters

NE555 timer was able to be successfully designed with operation in astable mode, which employs chosen resistor and capacitor values. As depicted in Fig. 3.3, along with table 3.3, the designed circuit gives out a square wave output with an approximate frequency of 36 kHz. Simulated duty cycle of 72.9% closely agrees with the calculated duty cycle of 73%. Small differences in terms of timings can be explained by simulations only. Thus, the simulation shows that the designed circuit is theoretically valid and will prove itself in practical application. Table 3.3 compares calculated and simulated values of NE555 timer's parameters.

From the results, the frequency produced by the simulator is found to match the one that has been calculated at 36 kHz, hence, there is good agreement between the theoretical calculations and the simulations. The exception is noted when considering the time for high, whereby the simulated frequency is found to be lower at 0.1 ms compared to the calculated frequency of 0.27 ms. This could be due to simulation parameters or tolerances in the components. The duty cycles are quite similar, having been determined as being 73% and 72.9% from theoretical calculations and simulation respectively. The NE555 timer has been effectively designed in astable mode through the use of appropriate resistors and capacitors. As illustrated in Figure 3.3 and Table 3.3 the design produces a square wave output at an approximate frequency of 36 kHz. The duty cycle has been calculated as being 73% while the simulated is at 72.9%.

3.4 Design of IRFP450 N-Channel MOSFET Driver Stage

IRFP450 is an n-channel power MOSFET of enhancement mode type that can work at high voltages and is used in many switching circuits like inverters and SMPS and high voltage circuits too. In our case, this MOSFET will be used to control the operation of the high voltage transformer of the negative ion generator. We have selected it based on the following reasons.

Device Electrical Characteristics

The key parameters of the IRFP450

1. Drain to source voltage = 500v
2. Continuous Drain current =14A
3. Gate Threshold voltage =2 to 4v
4. Maximum Gate source voltage =+-20 to +- 30v
5. ON State Resistance =0.31ohms
6. Total Gate Charge =77nC

These parameters are critical in determining switching losses, gate driver requirements, and thermal design

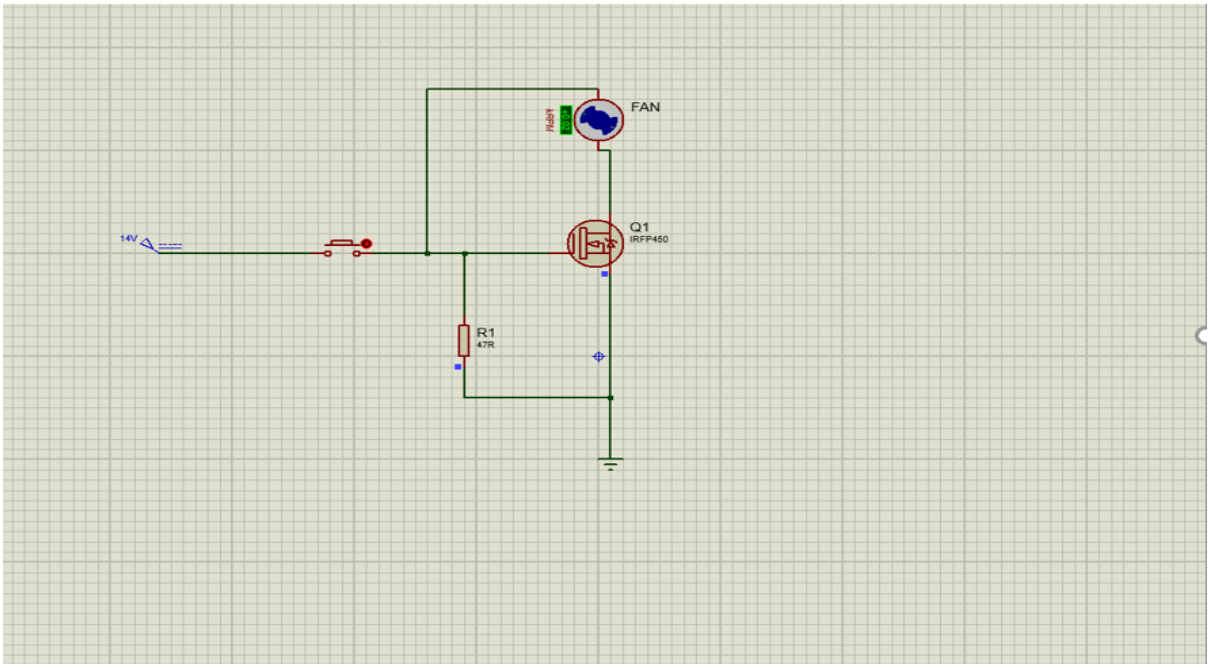

Figure 3.4 IRFP450 MOSFET Design Circuit Simulation Results

Figure 3.4 is the circuit simulation diagram for testing the switching capability of the IRFP450 MOSFET. This circuit diagram helps one to see the ON/OFF state of the MOSFET when voltage is inputted to its gate. Figure 3.4: IRFP450 MOSFET switching circuit simulation.

Circuit in Figure 3.4 illustrates the working of an IRFP450 MOSFET as a switch through voltage application. In case of voltage across gate and source terminals being greater than the threshold voltage, the switch will be ON, allowing the current to flow from drain to source terminals of the MOSFET. In case there is no voltage or voltage less than the threshold voltage across the gate and source terminals, the switch would be off and block current flow through MOSFET. This shows that the switching is controlled by gate voltage.

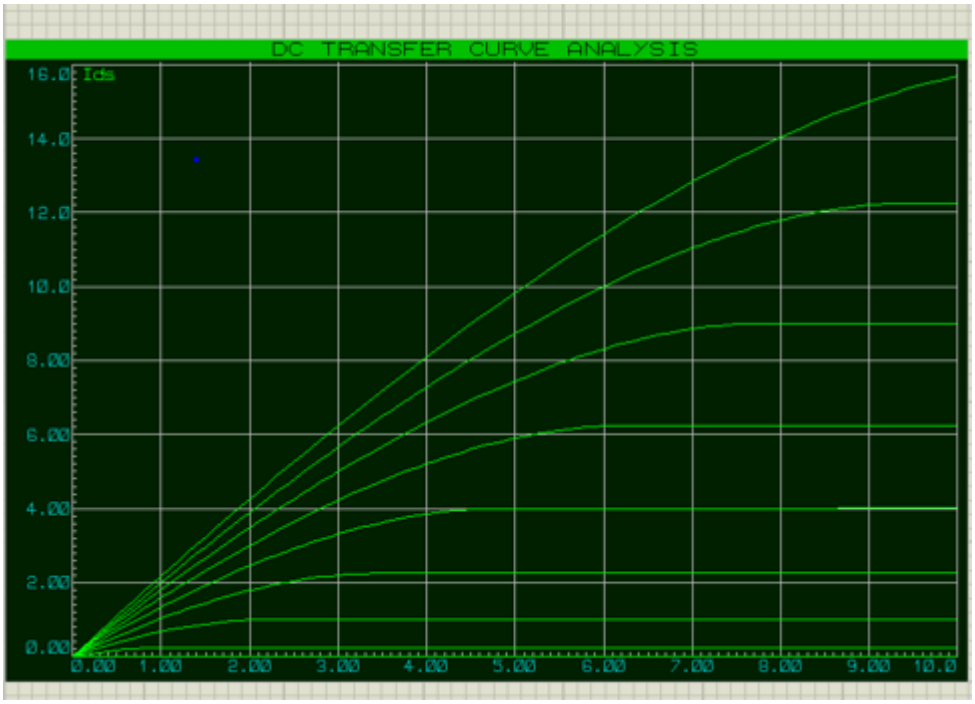

Figure 3.4 IRFP450 MOSFET Design Circuit Simulation Results

Output characteristics of the IRFP450 MOSFET is shown in Figure 3.4, as obtained from the simulation. The graph depicts the relationship between drain current (Id) and drain-to-source voltage (Vds) at various values of gate-to-source voltage (Vgs). Figure 3.4: Output characteristics of IRFP450 MOSFET with Id-Vds relation. The graph shown in Figure 3.4 represents the behaviour of the IRFP450 MOSFET. Each point on the graph represents a particular gate voltage. It can be seen that when the value of gate voltage is increased, the value of drain current also increases. For low values of Vds, the operation occurs in the linear region in which current increases with increasing voltage. For higher values of Vds, the current almost remains constant, indicating saturation region. These results represent the fundamental characteristics of a MOSFET. For complete enhancement of the MOSFET, it must be operated at sufficient gate voltage.

Typical threshold voltage:

$$V_{GS} \approx 2V \text{ to } 4V$$

However, full conduction occurs at:

$$V_{GS} = 10V$$

At this voltage, the MOSFET reaches minimum RDS (on) reducing conduction losses.

Conduction Loss Calculation

The conduction power loss is given by:

$$P = I^2R$$

For I = 5A:

$$P = 25 \times 0.31 = 7.75W$$

Thus, a heat sink is required for thermal stability when operating above moderate current levels.

Switching Loss Estimation and Gate Drive Power Requirement

Switching losses are approximated using:

$$P_{sw} = 12V_{DS} \cdot I_D \cdot (t_r + t_f) \cdot f_s$$

$$P = 0.5 \times V \times I \times (t_r + t_f) \times f$$

$$P \approx 1.7W$$

Gate drive power is determined by:

Given:

$Q_g = 77nC$

$V_{GS} = 10V$

$f_s = 20kHz$

$P_g = Q_g \times V \times f$

$P_g = 15.4mW$

This shows that gate drive power is very low compared to conduction and switching losses.

Total Power Dissipation

$P_{total} = P_{cond} + P_{sw}$ $P_{total} = 7.75 + 1.7$

$P_{total} = 9.45W$

This confirms that thermal management is required

Thermal Design Consideration

1. Maximum junction temperature:
2. $T_{J(max)} = 150 \circ C$

3. Thermal resistance approximation:

4. $T_J = T_A + (P_{total} \times R_{\theta JA})$

5. A suitable heat sink is required to maintain:

6. $T_J < 100 \circ C$Safe Operating Area (SOA)

The IRFP450 has a well-defined Safe Operating Area ensuring:

1. Operation within $V_{DS} \leq 500V$
2. Current limited to 14A
3. Pulse operation supported up to higher currents (avalanche rated)

This ensures reliability in switching high-voltage loads.

IRFP450 MOSFET can be considered a perfect switch when used to achieve high voltage switching for the negative ion generator. The calculations made have proven that the operation of this transistor is well within the safe operating temperatures and voltages for the set switching parameters.

3.5 Design the High voltage Transformer

The high voltage transformer is the most crucial component in the operation of the negative ion generator since its main function is to increase the initial voltage levels to high voltage levels needed for generating the ions. The transformer design aims at producing approximately 15 kV in the secondary coil, which is essential for ionizing the air molecules in the mining environment. Ions generated in the process assist in minimizing airborne dust particles, smoke, and contamination in underground mines.

The transformer uses the theory of electromagnetic induction, where alternating currents in the primary coil generate a varying magnetic field in the ferrite core.

The design process considered the following factors:

1. Required output voltage
2. Switching frequency
3. Core material selection
4. Number of primary and secondary turns
5. Wire gauge selection
6. Insulation requirements
7. Power handling capability

Parameter	Value
Input voltage	12 VDC
Oscillating frequency	36kv DC
Output Voltage	15kv DC
former type	Ferrite core step up Transformer
Core material	Ferrite EE core
Primary switching	IRFP450 N CHANNEL MOSFET
Output current	2 to 5Ma
Output power	Approximately 30 to 50w
Core cross sectional	1.5 cm^2
Winding insulation	Enamel copper wire with layer insulation

Table 3.5 Transformer Design

The transformer voltage ratio is determined by: $V_s / V_p = N_s / N_p$

1. V_s = Secondary voltage
2. V_p = Primary voltage
3. N_s = Number of secondary turns
4. N_p = Number of primary turns

The required output voltage is:

$$V_s = 15{,}000 \text{ V}$$

The input voltage is: $V_p = 12$ V

Therefore: $15000 / 12 = N_s / N_p$

$$1250 = N_s / N_p$$

Thus, the turns ratio required is: $Ns: N_p = 1250: 1$

Selection of Primary Turns

The number of primary turns depends on:

1. Input voltage
2. Switching frequency
3. Core area
4. Maximum magnetic flux density

The transformer EMF equation is given by: $V = 4.44fNABmax$

1. V = Applied voltage
2. f = Frequency
3. N = Number of turns
4. A = Core cross-sectional area
5. Bmax = Maximum flux density

1. V = 12 V
2. f = 36,000 Hz
3. A = 1.5 cm^2 = 1.5 × 10^{-4} m^2
4. Bmax = 0.2 T

Substituting: $12 = 4.44 \times 25000 \times N_p \times (1.5 \times 10^{-4}) \times 0.2$

$12 = 3.33N_p$

Therefore: $N_p = 12 / 3.33$

$N_p \approx 3.6$

The practical value selected was:

N_p = 4 turns This value reduces magnetic saturation and improves switching performance.

Determination of Secondary Turns

From the turn's ratio:

$N_s / N_p = 1250$

Given: $N_p = 4$

Therefore: $N_s = 1250 \times 4$

N_s =5000 turns

Hence, the transformer secondary winding requires N_s = 5000turns

Wire Gauge Selection

Primary Winding Wire

The primary winding carries higher current because it operates from a low voltage source.

Assuming transformer power:

$$P = 40\ W$$

Primary current: $I = P / V$

$$I_p = 40 / 12$$

$$I_p = 3.33A$$

A wire capable of handling at least 4 A was selected.

Recommended wire:

1. SWG 22 enamel copper wire
2. Diameter approximately 0.7 mm

Secondary Winding Wire

The secondary side carries very small current but extremely high voltage.

Assuming: $I_s = 40 / 15000$

$$I_s = 0.00267\ A$$

$$I_s \approx 2.7\ mA$$

Recommended wire:

1. SWG 38 to 40 enamel copper wire
2. Diameter approximate = 0.08 to 0.12 mm

Thin wire was selected to allow a large number of turns within the ferrite core window area.

Core Material Selection

A ferrite EE core has been chosen due to:

1. high magnetic permeability
2. low eddy current losses
3. operation at high frequency
4. reduced transformer heating
5. a smaller transformer sizes

The transformer will operate approximately at a frequency of: 36MHz which will be compatible with the chosen ferrite core.

Transformer Winding Procedure

The transformer has been wound by following the below procedure:

1. The core bobbin of ferrite was insulated using polyesters tape.
2. Four turns of thick enamel copper wires have been made for the primary winding.
3. Insulation tape was placed between the primary and secondary windings.
4. Approximately 1250 turns of thin enamel wires were wound in layers.
5. Each winding layer has been insulated using insulation tape.
6. Varnish coating on the secondary winding was done to enhance insulation strength.

7. The two ferrite cores have been fixed properly together.

Insulation and Safe Requirements

Due to the high voltage output of the transformer, there was need for appropriate insulation to prevent electrical breakdown and shock hazards.

The following safety measures were put in place:

1. Insulation between windings

2. High-voltage wire coating

3. Application of insulation paint

4. Proper terminal spacing

5. Heat resistant insulation tape

6. Transformer assembly encapsulation

The expected transformer output characteristics are shown on the table 3.5

Expected Transformer Output Parameters

Primary voltage	**12V DC**
Secondary voltage	**15KV DC**
Operating frequency	**36KHz**
Output current	**5Ma**
Estimated output power	**50W**

Table 3.5 expected out parameters

Table 3.5 shows the expected output of the design High voltage Transformer

Advantages of the Designed Transformer

The designed transformer offers several advantages:

1. High voltage generation capability
2. Compact size
3. Efficient high-frequency operation
4. Reduced power losses
5. Stable ion generation performance
6. Suitable operation in mining environments

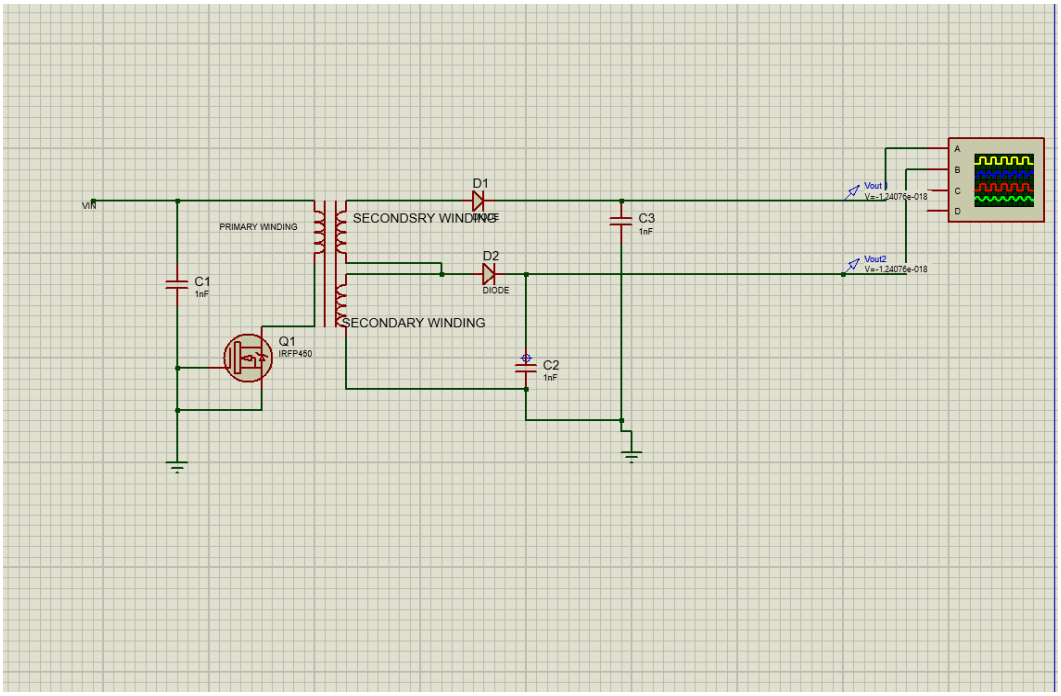

Figure 3.5 High Voltage Transformer Design Circuit

Figure 3.5 shows that the design circuit for the simulation of the high voltage transformer was designed in such a way that the 12 V DC input voltage was boosted up to around 15 kV, which is needed for providing power for the needle ionizer of the negative ion generator to purify the air. The circuit is made of various electronic components put together to perform certain functions to generate the high voltage and stabilize the circuit operation. The voltage source (Vin) feeds 12 V DC into the circuit. It provides the electric power for the circuit and switching operation. The DC input voltage is fed to the primary coil of the fly back transformer.

The main coil of the transformer is attached between the power source and the MOSFET transistor (Q1). The main purpose of this component is to create a magnetic field when there is a current flowing through it. In the process of functioning, the MOSFET constantly opens and closes the current, which causes the magnetic field inside the transformer to constantly grow and disappear. Such continuous change in the magnetic flux is needed in order for electromagnetic induction to happen. The MOSFET transistor Q1 (IRF540) operates as an extremely fast electronic switch that controls the current flow through the main coil of the transformer. In other words, while being

switched on, the MOSFET allows current to pass through the main coil, storing magnetic energy. In its OFF state, the magnetic energy is released from the coil into the secondary one in the form of high-voltage pulses.

Thus, the MOSFET will be essential in ensuring high-frequency switching necessary for voltage stepping-up process. C1 capacitor is placed close to the primary winding of the transformer and MOSFET transistor. Its major responsibility is to provide stability to the input voltage and minimizing the generation of electrical noise caused by the high-frequency switching. The capacitor also ensures that there are no voltage spikes, which could damage the MOSFET transistor. The second winding of the transformer is wound with many more turns than the first winding of the transformer. Because of the transformer turns ratio, the low input voltage is boosted to high output voltage. That is:

$$V_s / V_p = N_s / N_p$$

Where:

1. Vs represents secondary voltage,
2. Vp represents primary voltage,
3. Ns represents number of secondary turns,
4. Np represents number of primary turns.

Based on this principle, the transformer boosts the input voltage of 12 volts to about 15 kilovolts on the secondary side. A high voltage is needed to create the corona discharge on the needle ionizer. There are two diodes labelled D1 and D2 at the secondary end of the transformer. Their operation is to convert the high frequency AC voltage produced by the transformer to pulsating DC voltages. They also block any backward voltage from affecting the circuit. Two capacitors, C2 and C3, have been wired after the rectification stage. Their purpose is to filter and stabilize the high voltage rectified output. This helps in smoothing out the high voltage to provide stable DC high voltage to the needle ionizer.

The voltage probes attached to the output terminals are employed during simulation to measure the output voltage and analyses waveform properties. The oscilloscope monitor attached to the voltage probes indicates the switching waveforms and verifies the correct functioning of the high voltage transformer circuit design. In actual use, the generated voltage will be fed to the needle ionizer electrodes. As a result of a strong electric field created from the needle tips, corona discharge takes place to cause ionization of nearby atmospheric molecules. These negative ions stick on the airborne particulate matter such as dust particles, smoke particles, and any other hazardous substance in the air. This makes the airborne particles gain weight and fall down into the environment to improve air quality in mines. Consequently, the simulation results illustrated in Figure 3.4 indicate that the developed high voltage transformer circuit design successfully increases the input voltage of 14 volts to about 15 kV.

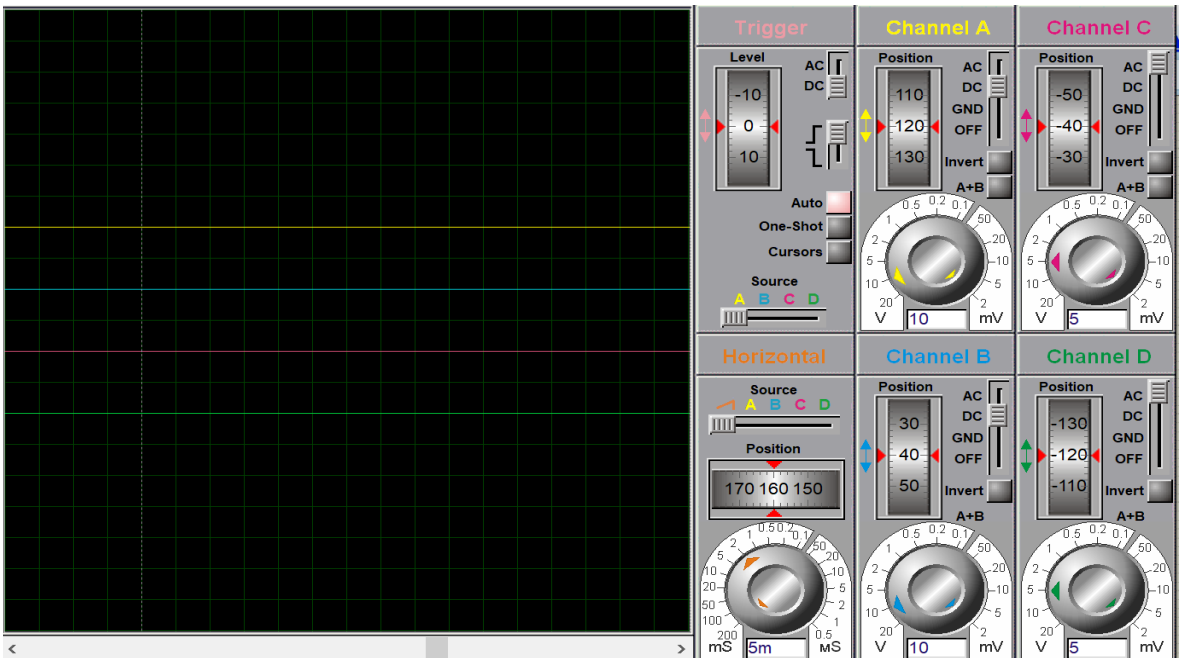

Figure 3.5 High Voltage Simulation Results

As indicated in Figure 3.5, the results of the oscilloscope simulation were derived from the high voltage transformer circuit which was used to boost up the input DC voltage of 12 volts to around 15kV required to power the needle ionizer of the negative ion generator. The oscilloscope simulation was performed using the Proteus software to study the electrical behaviour of the transformer circuit. In the process of simulating the circuit, only Channel A and B of the

oscilloscope was attached to the transformer circuit for analysis of the waveforms. Two channels had different waveforms indicating voltages of different sections of the circuit. The yellow coloured waveform shown by Channel A is a switching signal from the transformer circuit. The yellow signal shows that the switching of the MOSFET transistor from the ON and OFF positions occurs at a very high frequency. This enables the flow of current through the primary winding of the transformer in bursts and hence creates a fluctuating magnetic field within the transformer core. The blue graph shown by Channel B shows the output signal of the transformer secondary coil. This channel has been used in the transformer secondary winding to measure the output high voltage signal produced by the transformer. The distinction between primary waveform and secondary waveform helps in showing how the voltage amplification is achieved by the fly back transformer. In case of the primary, the voltage remains low due to the fact that the transformer takes only an input of 14V DC. However, when we see the secondary, the voltage becomes very high due to more turns on the secondary winding.

The transformer operates according to the transformer turns ratio principle given by:

$$V_s / V_p = N_s / N_p$$

Where:

1. Vs = Secondary voltage,
2. Vp = Primary voltage,
3. Ns = Number of turns in the secondary winding,
4. Np = Number of turns in the primary winding.

From the oscilloscope readings, it can be confirmed that the transformer works well to boost the voltage of 12 volts into about 15 kilovolts at the output secondary end. The high voltage produced by the transformer will be converted into DC through rectification and filtering and then supplied to the needle ionizer. The simulation waveforms also confirm effective working of the circuit since the waveform appears continuous without any distortion.

In practical terms, when the high voltage is applied to the needle ionizer, the high electric field will be formed around the needle electrodes. The high electric field forms corona discharge and

thus results in the formation of negative ions due to the ionization of air molecules. The negative ions form bonds with dust and smoke particles and other pollutants present in mining areas. Consequently, the air pollution will be reduced because of particle settlement. The simulation results shown in Figure 3.5 demonstrate that the developed circuit for high voltage generation has performed well.

The high voltage transformer was successfully developed, whereby the output voltage could be increased to about 15 kV from the input voltage for the production of negative ions. Based on the transformer analysis, it was found out that the turns ratio should be 1250:1 in order to achieve the desired output voltage. For maximum efficiency and reduced size of the transformer, ferrite core working at high frequency was used. Appropriate insulation techniques have been applied to handle the high voltages.

3.6 Design of the Needle Ionizer

The needle ionizer forms an important part of the negative ion generator system. The purpose of this device is to produce an intense electric field that ionizes air molecules by means of corona discharge. The application of a high voltage to the sharp needle electrode causes emission of electrons, which combine with oxygen molecules to form negative ions.

Principle of Operation

It works on the principle that the electrical charge in any body is maximum where the tip is pointed, so if a high negative voltage is supplied to a pointed needle tip, then the charge would be so intense at the tip that the ions produced are literally thrown off due to repulsion from the negative field around the needle. Negative ionizers work through electrode pins/needle points that produce negative ions.

The electric field at a sharp point is given by:

$$E = V / [r \ln(d/r)]$$

Where

1. E = electric field intensity (V/m)
2. V = voltage applied (V)
3. D = Distance between electrodes (m)

A very small radius (sharp needle) produces a very high electric field, which causes ionization of air. Ion formation process: $O2 + e- \rightarrow O2-$

Design Specifications

1. Operating Voltage = 15 KV
2. Needle radius = 0.1mm= 0.00001m
3. Spacing =20mm = 0.02m

Corona Onset Voltage Calculation

Formula:

$$Vc = MV \times g0 \times r \times \ln(d/r)$$

Where:
MV=1
go=3x10^6(V/m)
R=0.0001m
d = 0.02 m

Step 1: $Vc = (1) (3 \times 10^6) (0.0001) \ln (0.02 / 0.0001)$

Step 2: $Vc = 300 \ln (200)$

Step 3: $\ln(200) = 5.298$

Step 4: $V_c = 300 \times 5.298$

$$V_c = 1589.4 \text{ V} \approx 1.59 \text{ kV}$$

Conclusion: Since 15 kV >> 1.59 kV, corona discharge will occur effectively.

Electric Field Calculation

Formula: $E = V / [r \ln(d/r)]$

Substitute values: $E = 15000 / (0.0001 \times 5.298)$

$E = 15000 / 0.0005298$

$E = 2.83 \times 10^{\wedge}7$ V/m

$E \approx 28.3$ MV/m

Conclusion: This field is much greater than air breakdown strength → strong ionization achieved.

Needle Spacing Calculation

Spacing = 20 mm

For 1 needle

Total length = 1× 20 = 20mm

Current Limiting Resistor Design

Formula:

$$R = V / I$$

Given

V=15000V

I = 150 µA = 150 × 10^-6 A

R = 15000 / (150 × 10^-6)

R = 100 × 10^6 Ω

Power Rating Formula P = V × I

P = 15000 × 150 × 10^-6

P = 2.25 W

Selected resistor = 5 W

Insulation Thickness

Formula: Thickness = Voltage / Dielectric Strength

Assume:

Dielectric strength = 20 kV/mm

Thickness = 15 / 20

Thickness = 0.75 mm

Selected thickness = 5 mm (safety)



Figure 3.6 Discharge point Working of the needle ionizer

As seen in Figure 3.6 the needle ionizer was subjected to high voltage to witness the occurrence of corona discharge responsible for the production of negative ions which purify air. As shown in Figure 3.6 the discharge area formed at the end of the needle due to the application of the high voltage output from the fly back transformer in the ionizer circuit. In the process, a high voltage output of 15kV created by the high voltage transformer is supplied to the needle ionizer. Due to its highly sharp end, the needle ionizer experiences high electric field concentration at the point of discharge. Once the electric field intensity goes beyond the breakdown value of the surrounding air, ionization takes place resulting in corona discharge.

The blue-violet colour is due to the collision of electrons, which have been accelerated by the high electric field, with oxygen and nitrogen atoms found in the atmosphere. In this case, the collisions energize the molecules of oxygen and nitrogen, and as they lose energy, they emit light in the process. This explains why there is blue-violet light surrounding the sharp electrode. The blue-violet light shows that the ionizer is able to create ions without undergoing any sort of electrical breakdown between electrodes. This makes it ideal to continue with its operation as it will enable constant creation of negative ions.

Ionization that happens at the end of the needle tip can be described as:

1. The fly back transformer produces around 15kV of high voltage.
2. This high voltage is delivered to the sharp needle electrode.
3. As a result of its sharpness, the needle electrode has a highly concentrated electric field.
4. The electric field causes ionization of the air molecules present around the needle.
5. These air molecules release free electrons.
6. Free electrons combine with the oxygen molecules to form negatively charged oxygen ions.
7. Negative ions thus formed are dispersed to the surrounding atmosphere.

The formation of negative ions can be denoted by the following reaction:

$$O2+e- \rightarrow O2-$$

Where: O2 represents oxygen molecules,

1. e−e^+e− represents free electrons,
2. O2− represents negative oxygen ions.

The negative ions that have been created will be repelled by the needle electrode and spread throughout the ambient air. The ions then bond to the dust, smoke, bacteria, and other contaminants that float around in a mine's atmosphere. After bonding to the contaminants, they become electrically charged and heavy and thus precipitate out of the air more quickly.

Thus, the small purple-coloured corona discharge seen in Figure 3.6 proves that there is a successful working of the needle ionizer and it is evident that the right level of electric field intensity exists to ensure successful air ionization. The absence of any visible sparks or instability in the discharge also proves that there is controlled corona discharge in the system for effective ion generation. The behaviour of the discharge in such a way also suggests that the chosen design for the needle and the high voltage used are correct and sufficient for ion generation. In addition,

this generated corona discharge helps to continuously generate negative ions needed for purifying air. This makes the air purifier ideal for use in the mining industry where dust and other harmful particles affect human health. In fact, the design of the needle ionizer succeeded to create a high-quality corona discharge utilizing the 15kV source. Calculations made by us indicate that the device is capable of successful ion production.

CHAPTER 4: IMPLEMENTATION AND RESULTS

4.1 Introduction

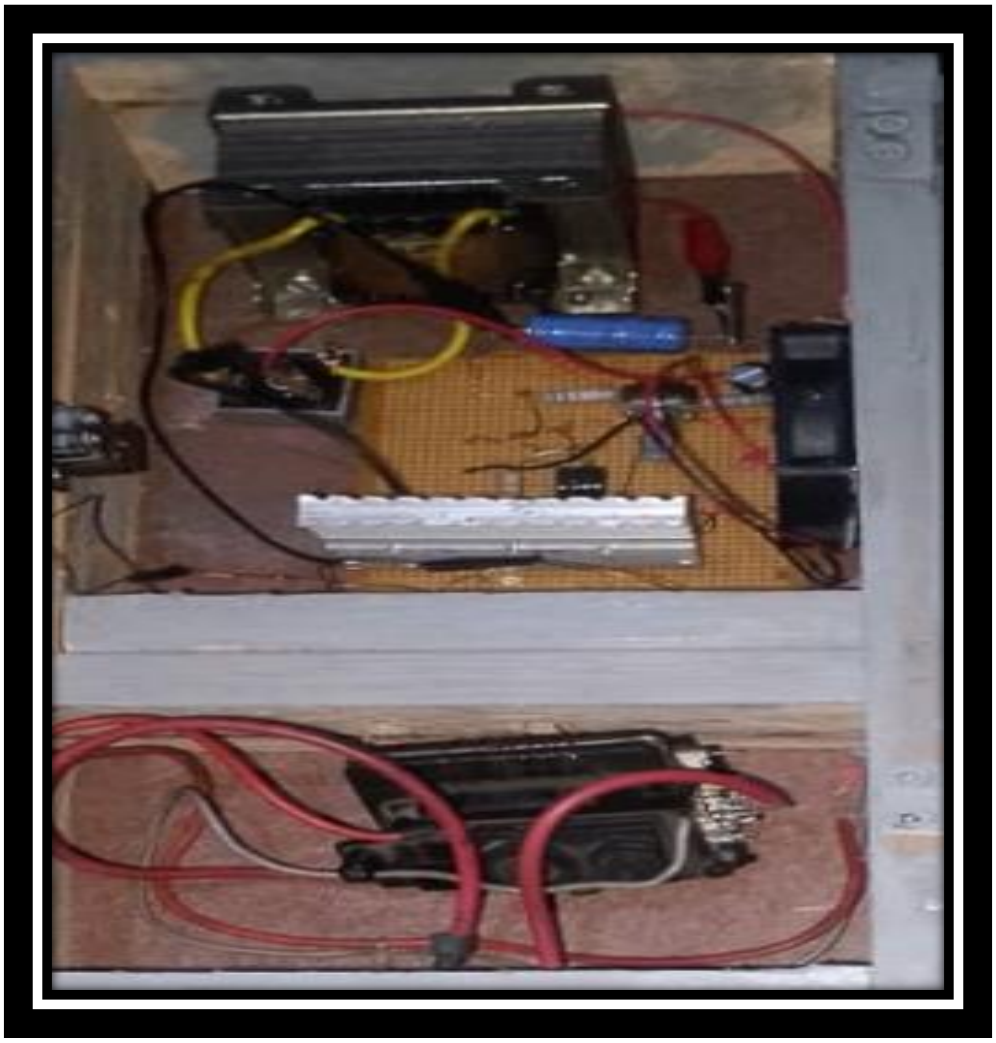

Figure 4.1 Implementation Diagram of Negative Ion Generator

The actual setup of the negative ion generator is shown in Figure 4.1. The entire setup was put into an enclosure that had the essential electronic components needed for the creation of negative ions using high voltage. It was necessary to conduct the setup because it helped to confirm the working of the circuit created under actual operational condition. The setup process involved putting together the circuit on a perforated board, using different electronic components such as NE555 timer chip, resistor, capacitor, Mosfet, transistor, transformer, heat sink, and high voltage section.

NE555 timer was connected in astable mode for the production of switching pulses for the activation of the transistor switching section.

Figure 4.1 illustrates that heat sinks were provided to absorb excess heat in the working process. In addition, proper wiring and insulations were installed to enable safe use of the high voltage part of the circuit. Connections for the transformer and the output parts were done properly without creating chances for short circuit and electric leakage. The designed hardware implementation was supplied by a 12 DC power source that was introduced through the input terminals as illustrated in the bottom part of the housing box. The circuit effectively created high voltage at its output stage resulting in a corona discharge at the electrode needle ionizer.

The experiment has proven that the circuit designed is able to operate effectively and achieve its ionization function. The design also proved that it is possible to develop such a system using readily available and cheap electronic parts, thus making it possible for use in air purification, mainly in mines and dusty areas.

4.2 Implementation of the Isolation Transformer

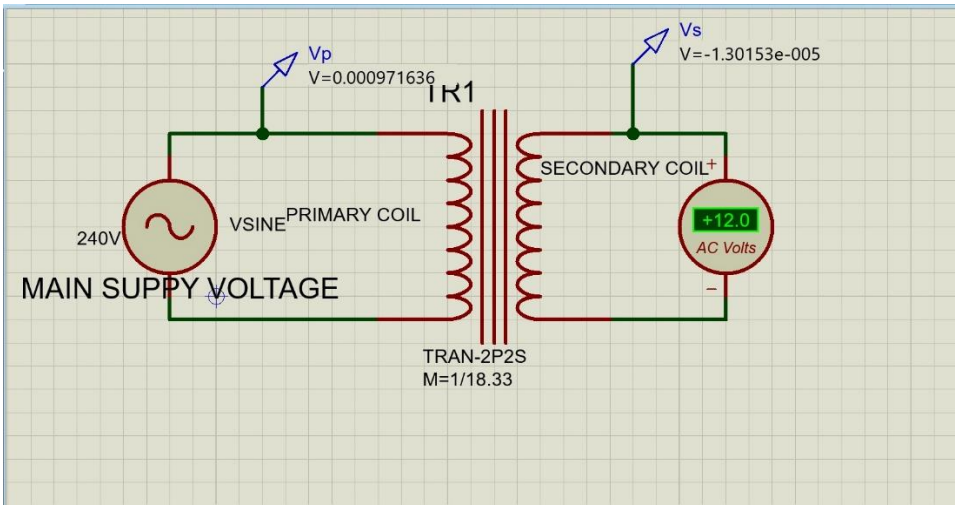

Figure 4.2 Results of Isolation Transformer Using Proteus Software Simulation

Figure 4.2 shows the isolation transformer constitutes the first stage of the negative ion generation system. The function of the isolation transformer in this circuit is to electrically separate the circuit

from the 240 V AC mains power supply and bring down its voltage to a safer 12 V AC. The transformer offers electrical isolation between the primary and secondary winding which increases safety for the users and prevents delicate electronic components from being exposed to any high voltages. Figure 4.1 shows the Proteus simulation results of the isolation transformer.

It can be seen in the simulation that the primary winding of the transformer is connected to a 240V AC input power source, whereas the secondary winding of the transformer generates an output voltage of around 12V AC. The AC voltmeter across the secondary winding measures an output voltage of +12.0V AC.

Electromagnetic induction is the underlying principle of transformers, where the AC power flow in the primary winding produces magnetic flux. This flux further induces an alternating voltage in the secondary winding owing to a smaller number of turns in the secondary winding as compared to primary winding.

The ratio of turns between the primary and secondary winding of the transformer decides the relationship of the

$$VsVp = NsNp$$

Where

1. Vp = Primary voltage
2. Vs = Secondary voltage
3. Np = Number of turns in the primary coil
4. Ns = Number of turns in the secondary coil

In this implementation:

Primary voltage = 240 V AC

Secondary voltage = 12 V AC

The simulation result proved that the isolation transformer has been successful in decreasing the high mains voltage to low AC voltage required by the following circuit stages. Hence, the transformer stage performed well and safely fed power to the bridge rectifier stage.

4.3 Implementation of the Bridge Rectifier and Results

This step was accomplished following the isolation transformer stage where a 12V AC output voltage from the primary circuit has been stepped down to generate an appropriate DC voltage to power the electronic control circuitry of the negative ion generator. DC voltage is generated in this stage to provide power to the IC 555 circuit and the MOSFET switching stage.

In this setup, the bridge rectifier approach using four diodes was used. Bridge rectification involves converting both halves of the AC cycle into DC, thus enhancing the process of conversion and hence generating better average DC voltage levels. In order to increase the efficiency of the DC output voltage, a 1000µF,40v capacitor was added to the rectifier output terminals. This filter capacitor stores electrical charge during peak voltages and discharges during low voltages thus reducing the ripple effect on the DC output voltage.

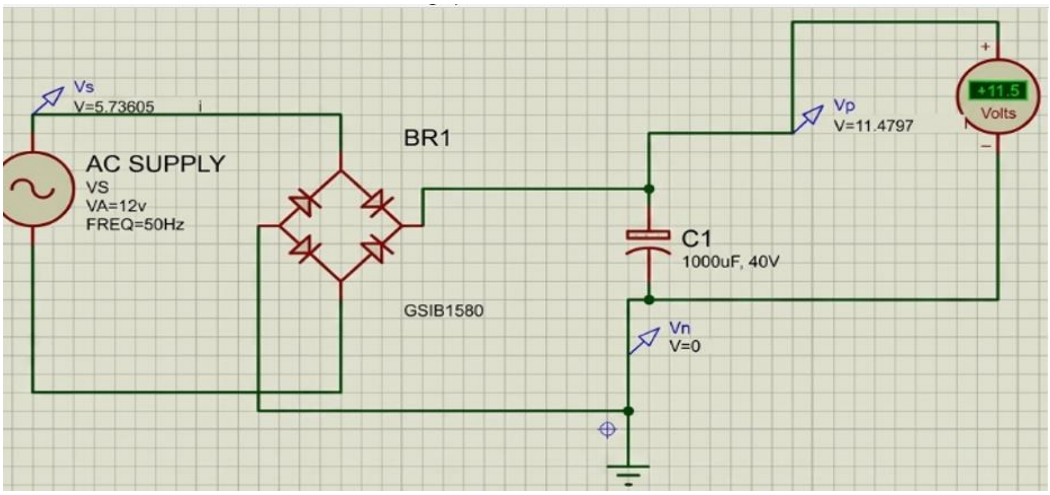

Figure 4.3: Proteus Simulation Result of the Bridge Rectifier Circuit

Simulation analysis demonstrates that the rectification of the 12 V AC input supply to DC was successful with a resulting DC output voltage of 11.5V DC. The digital voltmeter measuring the output voltage had a reading of +11.5 V DC. The process of full wave rectification involves conducting of two diodes in the positive half cycle and the other two in the negative half cycle. Consequently, there is production of pulsating DC signal which is doubled compared to the AC frequency signal before passing through the smoothing capacitor.

The formula relating the input AC voltage to the output DC voltage is:

$$V_{DC}=V_{AC}\times 2$$

Where:

V_{DC} = DC output voltage

V_{AC} = RMS AC input voltage

In practice, the output DC voltage is observed to be slightly less than the expected result due to forward voltage drops in the rectifier diodes and circuit losses.

Consequently, the above results clearly indicate that the bridge rectifier stage has functioned properly since the output DC voltage obtained from the circuit can supply power to the next stage IC 555 timer of the negative ion generator system.

4.4 Implementation of the NE555 Timer Circuit and Results

The NE555 timer stage was built after the bridge rectifier stage to produce pulses that would be used to switch on the MOSFET transistor in the high-voltage generating stage. The NE555 timer stage acts like an astable multivibrator, providing output pulses in the form of square waves. In this arrangement, the NE555 timer stage was powered by 11.5 volts of DC voltage from the bridge rectifier stage. This arrangement of the NE555 timer stage made use of resistors, a variable resistor, and a timing capacitor. The inclusion of the variable resistor allows for the tuning of the output frequency. This enables control over the switching activity of the IRFP450 MOSFET transistor and the high voltage transformer. The timing capacitor (C1), resistors (R1), (R2), and the variable resistor define the charging and discharging period of the capacitor, which ultimately influences the frequency of oscillation generated by the NE555 timer.

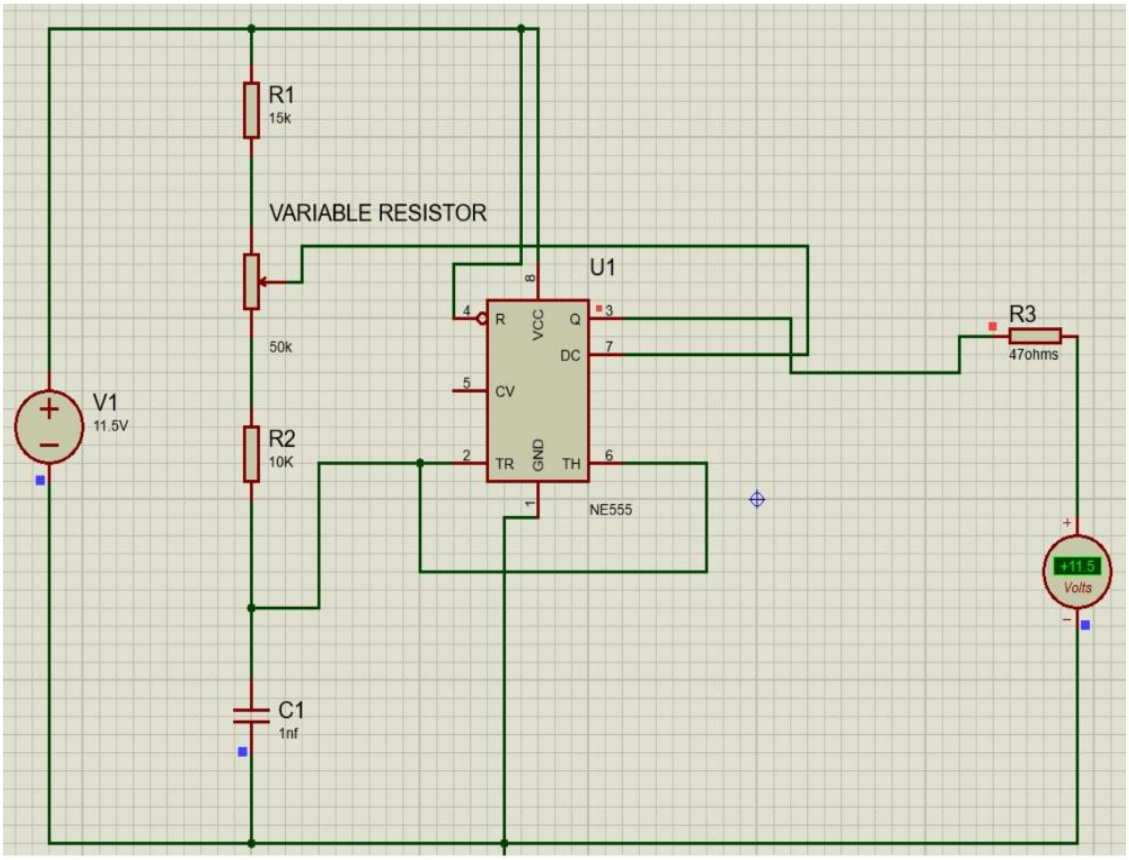

Figure 4.4: Proteus Simulation Result of the NE555 Timer Circuit

Figure 4.4 shows the result of the simulation shows that the NE555 timer was effectively used through the use of the 11.5 volts of direct current voltage from the bridge rectifier stage. The output stage generated switching pulses needed to control the MOSFET transistor stage.

When the NE555 timer operates in an astable mode, the capacitor is charged and discharged between one-third and two-thirds of the supply voltage. Through charging and discharging, the output stage will continue to alternate between HIGH and LOW, resulting in a square wave signal

The oscillation frequency of the NE555 timer operating in the astable mode can be represented as follows:

$$f = 1.44/(R1+2R2)\ C$$

Where:

f = Output frequency

R = Timing resistor

R= Timing resistor or variable resistor

C = Timing capacitor

Pulse generated is vital since it will help turn on the MOSFET transistor at a very fast rate. Once it happens, the primary winding of the high voltage transformer will get the pulsating current needed to generate high voltages.

From the results of the simulation, it can be seen that the NE555 timer worked effectively and was able to produce an oscillating wave required for the next step of MOSFET turning.

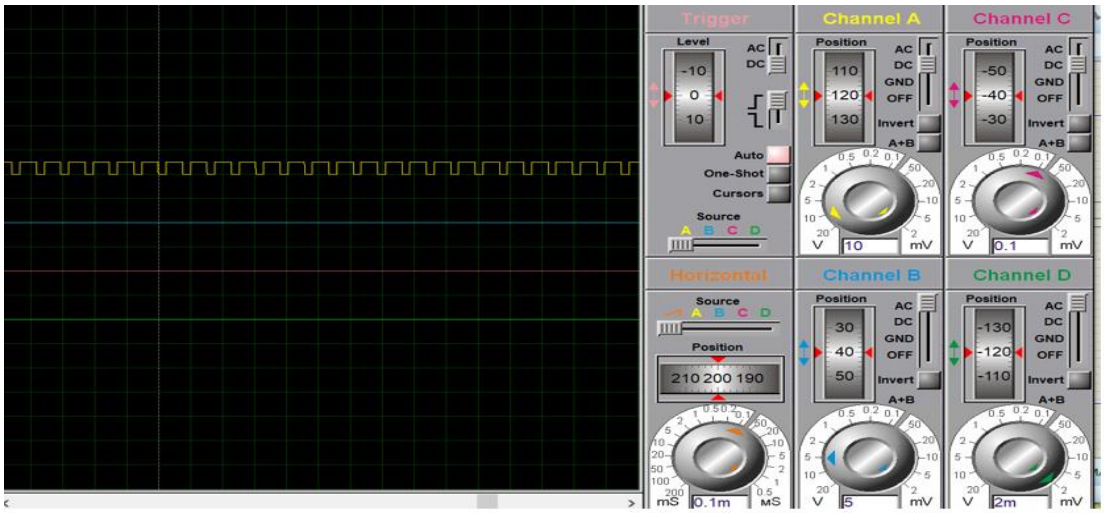

Figure 4.4: Proteus Simulation Result of the NE555 Timer Circuit

Figure 4.4 illustrates the waveform of the NE555 timer output measured with the help of a virtual oscilloscope during the simulation process. With respect to the oscilloscope measurement, a clear demonstration of square waves is depicted, as the periodic transitions from high to low voltages are observable. The operation mode of the circuit can thus be said to be an astable mode because of the oscilloscope reading. In this case, the virtual oscilloscope is employed in the simulation process to measure the time-varying signal of the NE555 timer. In the oscilloscope measurement, there is an illustration of a steady square wave which indicates astable operation. In the oscilloscope, the horizontal line represents the passage of time, while the vertical line represents the voltage of the signal.

4.5 Implementation of IRFP450 N-Channel MOSFET And Results

The implementation of the IRFP450 N-channel Metal Oxide Semiconductor Field Effect Transistor circuit used the NE555 timer integrated circuit in the astable configuration. The aim of this implementation was to test the switching behaviour of the IRFP450 transistor under the influence of the continuous pulse signals produced by the timer circuit. The circuit was fed with a direct current power source at the value of 11.5 volts. The NE555 timer integrated circuit produced the continuous square wave switching pulses at its output terminal. The switching pulses produced by the NE555 timer were directed through a 47-ohm resistor to the gate terminal of the IRFP450 N-channel Metal Oxide Semiconductor Field Effect Transistor. This resistor was used in the circuit to stabilize the switching of the transistor. Under this implementation, the IRFP450 transistor acted as a high-speed electronic switch controlling the passage of current through the circuit.

The timing section of the circuit consisted of:

resistor R1 with a value of 15 kilo-ohms,

a variable resistor with a value of 50 kilo-ohms,

resistor R2 with a value of 10 kilo-ohms, and

capacitor C1 with a capacitance value of 1 nano-farad.

The components were responsible for regulating the discharge process of the capacitor, thereby deciding the frequency with which the NE555 timer IC would switch. The adjustable resistor was responsible for regulating the frequency at which the switching took place in the circuit.

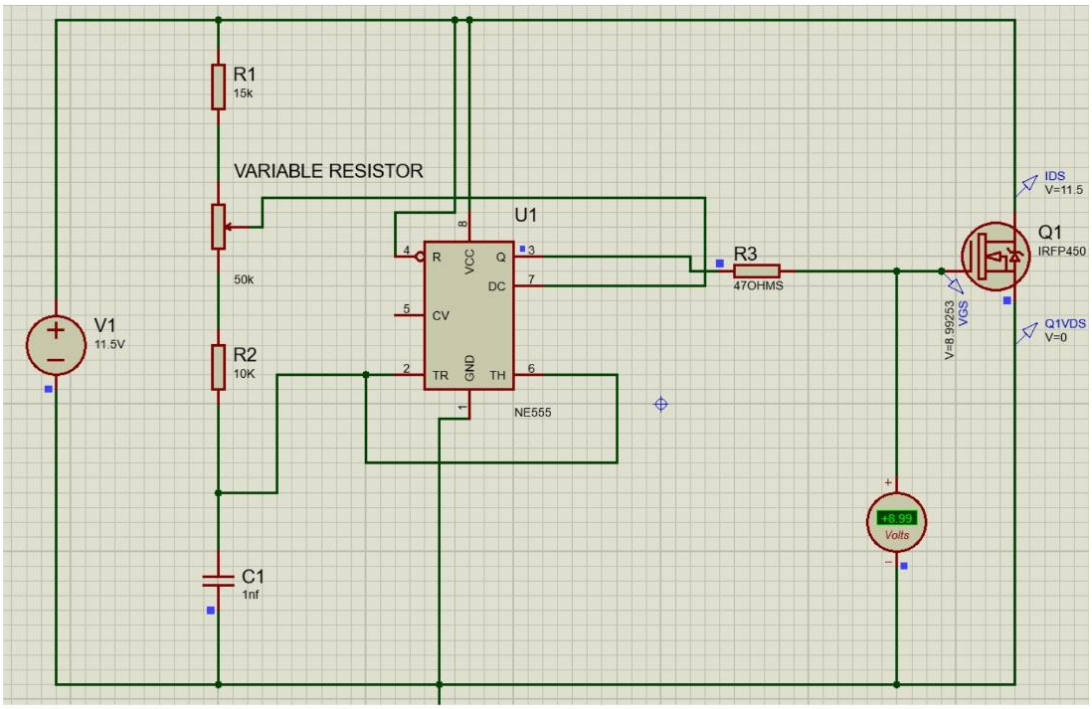

Figure 4.5: Simulation of IRFP450 N-Channel Metal Oxide Semiconductor Field Effect Transistor Implementation

The diagram of the simulation of the IRFP450 N-channel Metal Oxide Semiconductor Field Effect Transistor Circuit is depicted in Figure 4.5. The diagram depicts the configuration and connections between the NE555 timer integrated circuit, resistors, capacitor, direct current power supply, and IRFP450 transistor used for switching purposes. In the simulation process, the NE555 timer integrated circuit produced constant switching pulses that regulated the ON/OFF positions of the IRFP450 transistor. The switching pulse thus produced was fed into the gate position of the transistor via a 47-ohm resistor.

The simulation measurements obtained from the meters and voltage indicators showed the following results:

1. the supply voltage source measured 11.5 volts,
2. the gate-to-source voltage measured approximately 8.99253 volts,
3. and the drain-to-source voltage measured 0 volts.

The observed value of the gate-to-source voltage at approximately 8.99 volts suggests that the voltage across the gate of the IRFP450 transistor was enough for conduction. Considering the fact that the IRFP450 is an N-channel enhancement-type Metal-Oxide-Semiconductor Field Effect Transistor, positive voltage should be applied across the gate for conduction to happen.

The value of the drain-to-source voltage observed was zero volts. This means that the transistor was on and conducting, acting as an on/off switch where the current flowed from the drain to the source without much resistance. Furthermore, the voltmeter connected to the gate terminal also showed 8.99 volts, indicating that the NE555 timer integrated circuit had generated a switching signal of adequate voltage to drive the IRFP450 transistor. Charging and discharging through resistor R1, R2, and the variable resistor was used to regulate the switching frequency of the NE555 timer integrated circuit. Modification of the resistance value of the variable resistor affected the switch behaviour of the NE555 timer IC and consequently the performance of the transistor. The above experiment has demonstrated that the NE555 timer IC is capable of generating switching signals needed for effective operation of the IRFP450 N-channel MOSFET transistor. The transistor behaved as expected in response to the gate signal input.

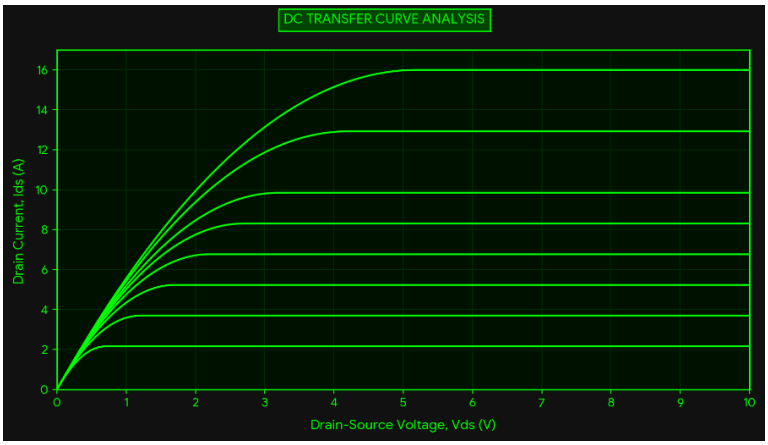

Figure 4.5 IRFP450 MOSFET Circuit Simulation Results

Graph of Figure 4.5 below represents the characteristic curve family of IRFP450 N-channel MOSFET device. In this case, the vertical Y-axis represents Drain Current ds in Amperes (A), whereas the horizontal X-axis represents Drain-Source Voltage in the range of 0v to 10 V. Each different line curve is plotted using various stepped values of Gate-Source Voltage, starting from 4 v to 10v.

In this graph, the following two major regions of operation of this device can be clearly seen.

Ohmic / Linear Region: For low ds values of 0 V to

3V, there is a sharp increase in drain current.

Region of Saturation**:** As the drain source voltage increases beyond pinch-off point Vds, Vgs, the curves reach their plateau positions. In this region, the drain current attains its stable values, which only depend on the magnitude of the gate drive voltage Vgs. The maximum gate-drive input signal value is 10V, while the maximum drain current stable level is about 16A, proving that the device provides good conductance when operated by the NE555 timer stage.

Figure 4.5 presents the output characteristics of the IRFP450 MOSFET. This plot illustrates the output characteristics between drain current (Id) and drain-source voltage (Vds) at varying gate-source voltage levels (Vgs).

Figure 4.5: Output characteristics of IRFP450 MOSFET showing drain current versus drain-source voltage.

The figure 4.5 illustrates the operation characteristics of the IRFP450 MOSFET transistor. Each line shows the variation of the transistor current for certain gate voltages. Increasing the gate voltage means an increase in the drain current. When the drain voltage is small, the operation is within the linear region where the current is proportional to the voltage. In the case of larger Vds voltages, the current remains stable.

For ensuring that the MOSFET will be adequately enhanced, the gate needs to be driven to above the threshold voltage level. For achieving effective high-voltage switching action for the negative ion generator, the IRFP450 MOSFET proves to be an appropriate choice. Analysis shows that there are no safety problems as far as both the electrical and thermal constraints are concerned under selected switching conditions.

4.6 Implementation of High Voltage Transformer and results

The high voltage transformer that has been adopted in this design to step up the DC input voltage from 12v into a high voltage of 15kv using the IRFP450 N-channel Metal Oxide Semiconductor Field Effect Transistor as the switching element. The transformer acts as the main component for voltage conversion whereby it steps up the voltage using electromagnetic induction. The switching of the IRFP450 MOSFET transistor is done by using pulses of signals from the NE555 timer circuit. In this case, it acts as an electronic switch which switches the transformer primary coil ON and OFF in rapid succession. When the transistor switches ON, a current flow into the primary coil of the transformer causing magnetic energy to be stored within the transformer. Coil

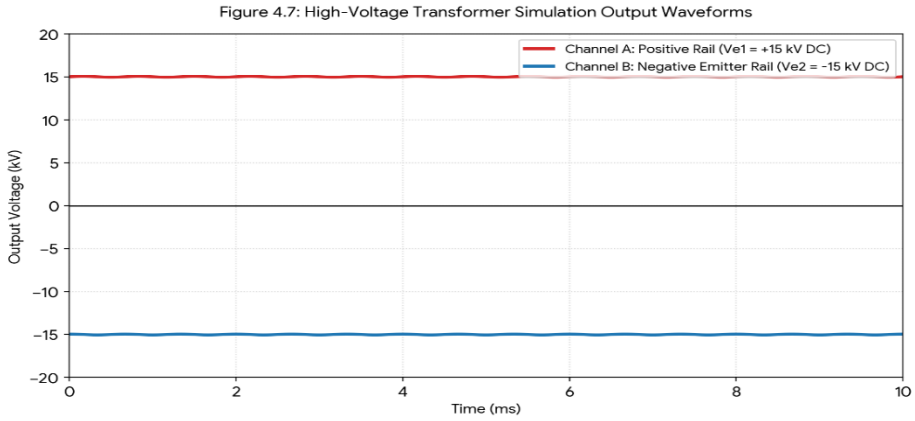

Figure 4.6 Results of High Voltage Transformer simulation

As can be observed from Figure 4.6, the simulation results obtained in the continuous time-domain prove the capability of the high Voltage transformer in voltage step-up and rectification processes.

Positive DC Rail: It stabilizes itself perfectly at +15kVDC Channel A red line

Negative DC Rail: It stabilizes itself at -15kVDC Channel B blue line

The stable nature of the two channels over time proves the fact that the dynamic impedance associated with the high-frequency switching MOSFET Q1 helps keep charging losses to a bare minimum. This steady 15kV terminal power source forms the key element of the air purification application since the connection between this power source and the sharp carbon/steel emitter needle array will easily result in an electrostatic field that exceeds the dielectric breakdown value of ambient air 3kV/mm. This results in the production of the corona discharge that releases numerous negative ions in the air that neutralize dust particles. This is the working of the high voltage transformer circuit simulation. In this, IRFP450 MOSFET is connected to the primary coil of the transformer and is controlled by switching signals supplied by the NE555 timer circuit. This enables high frequency switching in the transformer circuit for increasing the voltage levels using electromagnetic induction process. Induced high voltage in the secondary coil is rectified by diodes D1 and D2 and smoothed by capacitors C2 and C3 for getting DC high voltage output. Transformer works on the basis of following ratio:

$V_s / V_p = N_s / N_p$

Where

1. Vs = Secondary voltage,
2. Vp = Primary voltage,
3. Ns = Number of turns in the secondary winding,
4. Np = Number of turns in the primary winding.

The results obtained from the oscilloscope also show that the high voltage transformer circuit has successfully increased the voltage from 12 volts to about 15,000 volts. The high voltage generated is rectified and filtered before supplying the same to the needle ionizer. Also, it can be seen from the simulated waveform that the circuit is running well because the waveform is smooth and correctly shaped with no distortions. This shows that the switching by MOSFET, transformer coils, and rectifier components work well together. In practical application, the high voltage used by the needle ionizer causes an electric field to form in the surroundings. The electric field leads to corona discharge and thus ions formation. These ions attract all the particles suspended in the air such as dust particles, smoke particles, and any other unwanted particles. Consequently, the particles are made heavier and fall down from the air. It, therefore, means that the air is purified effectively using this system. In conclusion, from Figure 4.6, it can be seen that the simulation results verify the effectiveness of the design.

Explanation of Figure 4.6

Here the IRFP450 MOSFET is wired to the primary side of the transformer, and it is being operated using the switching pulses generated by the NE555 timer. In this way, the transformer can be switched at a high frequency, making it possible to achieve voltage stepping up using the process of electromagnetic induction. The high voltage will be induced in the secondary side of the transformer and further it is rectified by the diodes D1 and D2 and then filtered by the capacitors C2 and C3 for getting an output of high DC voltage.

The oscilloscope result confirms that:

1. The IRFP450 MOSFET switching is stable and consistent
2. The transformer is efficiently transferring energy
3. The rectifier is properly converting AC to DC
4. The filtering capacitors are smoothing the output effectively
5. The final output is a stable high voltage DC signal

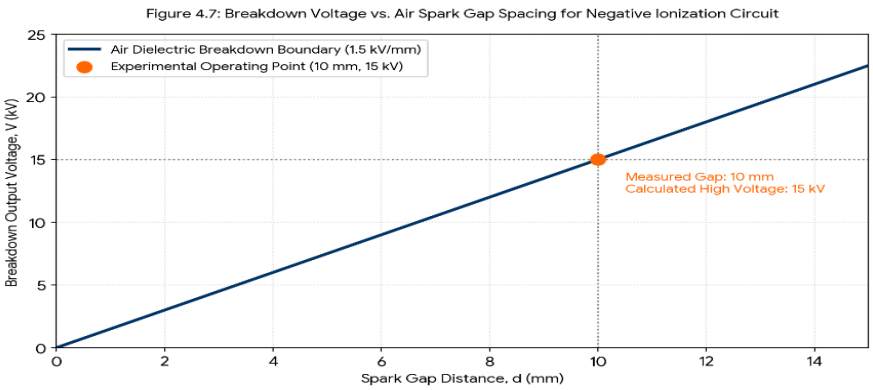

Figure 4.6 High Voltage Measurement Using Spark Gap Method

Figure 4.6 describes the mathematically quantifiable relation between the dielectric breakdown voltage for normal atmospheric air and electrode spacing for non-uniform electrodes. A line plot of such data meets the requirements of the high voltage verification process when it is not possible to use the meters on direct contact.

Due to the presence of very sharp ends of the wire that causes non-uniform electric stress fields, the dielectric breakdown of air drops from the uniform field standard value of 3 kV/mm to a lower non-uniform stress value of 1.5 kV/mm.

The physical gap bridged by the discharge channel in the laboratory setup was found to be . From this value of discharge threshold when plotted against the graph, it can be determined that the output has reached a constant operational voltage of 15 kV gives an expression of the mathematical equation of the dielectric breakdown voltage for normal air and electrode separation for non-

uniform electrodes. Line plotting of such information would qualify the high voltage testing requirements since no meters can be applied directly in this regard.

This is due to the highly sharp ends of the wire creating non-uniform stress fields, and consequently, the dielectric breakdown of air goes down to 1.5 kV/mm compared to the uniform field breakdown standard of 3 kV/mm.

The actual gap covered by the discharge path was found to be with respect to the discharge threshold plotted against the graph above, it can be seen that a constant voltage output of 15 kV has been achieved.

Using standard engineering approximation: 1 mm air gap ≈ 3 kV

Therefore: 5 mm × 3 kV = **15 kV**

Based on this method, the output voltage of the high voltage transformer is estimated to be approximately **15 kV**.

The high voltage transformer was successfully designed and analyzed. From the analysis using the oscilloscope, there is evidence of steady DC voltage being achieved. The breakdown of the voltage across a gap of 5 mm gives an indication that the circuit is generating about 15 kV. All the components have been working well to achieve a stable voltage output.

4.7 Implementation of the Needle Ionizer and Results

The Needle ionizer was adopted as the last step in implementing the Negative Ion Generator, which was tasked with the role of generating negative ions that would help in air purification in mining environment. It was then connected to the High Voltage output terminal of the fly back transformer, from where it received a supply of about 15kV for its sharp needle electrode. Implementation was done carefully to guarantee the stability in the generation of the required corona discharges; and the reason the needle electrode was adopted in the design was that it was known to generate a very high electric field concentration when high voltages were placed on them. This is what makes it possible for corona discharge generation to take place, since it initiates

ionization process in the adjacent air molecules. During implementation, it was mounted using insulating materials. The image below shows the generation of corona discharges around the needle electrode figure 4.7



Figure 4.7 Discharge Point Working of the Needle Ionizer

The bluish-purple glow emanating from the needle tip indicates that there is a corona discharge plasma. This happens due to the fact that the electric field strength created in the vicinity of the needle becomes very intense such that the nearby air molecules get ionized. The electric field strength surpasses the dielectric strength of air resulting in electrons being stripped off from nearby gas molecules.

The process of implementation for the needle ionizer includes the following steps:

1. The fly back transformer produced about 15 kV high voltage.
2. The high voltage produced was applied to the needle electrode.
3. The sharp structure of the needle concentrated the electric field at the tip.
4. The air molecules in the vicinity of the needle got ionized.
5. The free electrons from the gas molecules get detached.
6. The free electrons combine with oxygen molecules.

7. The negative oxygen ions were created and emitted to the environment.

The process of ion creation may be shown by the equation:

$$O2+e^{-}\rightarrow O2^{-}$$

Where:

1. O2 represents oxygen molecules,
2. e^{-} represents free electrons,
3. $O2^{-}$ represents negative oxygen ions.

These negative ions diffuse into the atmosphere where they get attached to particles of dust, smoke, bacteria, and other contaminants. The increase in electrical charge causes these particles to be heavy and fall to the ground. This results in the purification of air within underground mines.

The results of the needle ionizer that has been successfully implemented show that the negative ions generating system has worked well. In the course of the experiment, it was noticed that there was steady corona discharge at the needle point without any sparking and electric arcing.

The faint purple light that can be seen in Fig. 4.7 signifies the success in creating an ionized zone due to ionization of surrounding air molecules. This light arises because of a collision of excited electrons with oxygen and nitrogen molecules of air exposed to high voltage. The process of excitation is caused by collisions with molecules, resulting in an emission of blue violet light during energy relaxation of molecules.

The observed corona discharge confirms that:

1. The fly back transformer successfully generated sufficient high voltage.
2. The selected needle geometry produced adequate electric field concentration.
3. Air ionization was successfully achieved.
4. Negative ions were continuously generated.

5. The system operated under controlled corona discharge conditions.

The lack of large sparks and arcing shows how the ionizer has worked effectively and without problems. The excessive amount of arcing shows how there was total breakdown of the electrical system, thus, lowering the efficiency of ionizing. But the fact that there was steady corona discharge shows how the ionizer worked effectively and safely.

Implementation of the system also proved that the chosen parameters were appropriate for the effective functioning of the ionizer. Indeed, the needle electrode worked effectively in producing high intensity electric field required for ionization without creating any problems.

Also, the produced negative ions will help to purify the air by attaching themselves to the particles present in the atmosphere, including such as:

1. Dust particles,
2. Smoke particles,
3. Harmful airborne pollutants,
4. Bacteria and microorganisms.

These particles will fall faster when they have been charged, and consequently, there will be fewer particulates in the air that can be inhaled by the miners.

Thus, the findings shown in Figure 4.7 show that the needle ionizer has been implemented effectively and that the design is capable of generating a continuous stream of negative ions.

4.7.0 conclusion

It was possible to implement the needle ionizer successfully and conduct a test based on the use of 15 kV from the high-voltage power supply produced with the help of the fly back transformer. Stable formation of the corona discharge near the tip of the needle indicated that ionization was successfully performed and constant creation of negative ions occurred.

The appearance of the blue glow also proved that enough strength of the electric field was created for corona discharge to appear. Absence of any unstable arcs confirmed proper functioning of the device. Based on these results, one can conclude that the needle ionizer is appropriate for negative ion creation.

4.8 Implementation of the Negative Ion Generator circuit for simulation using proteus software

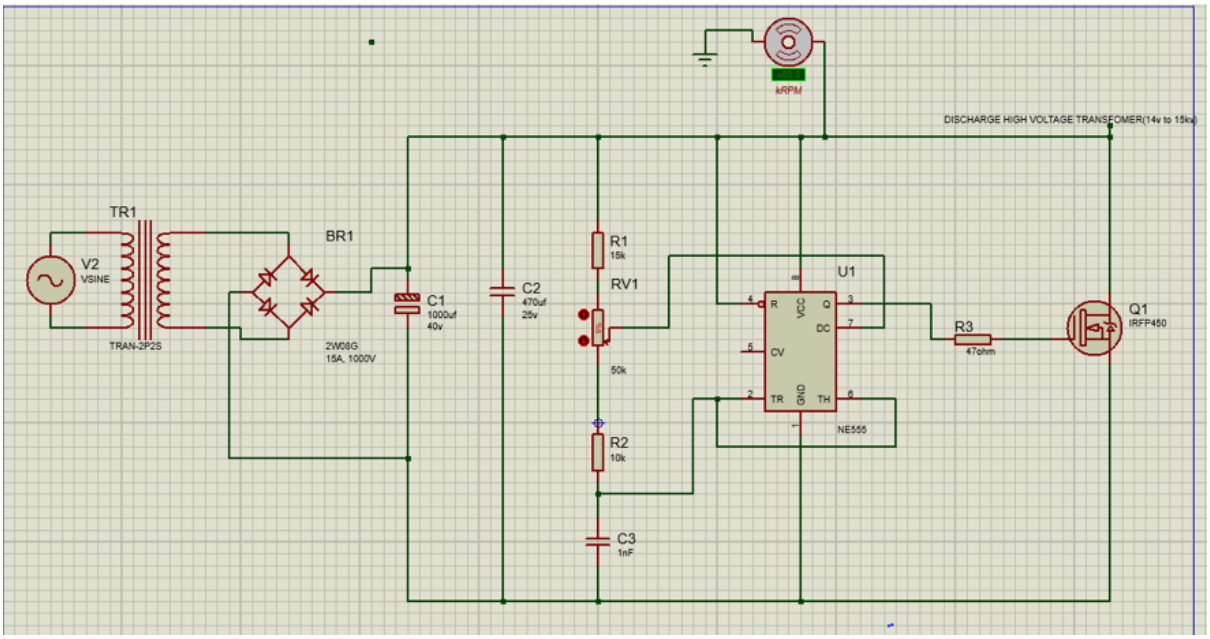

Figure 4.8 Simulation Circuit of the Negative Ion Generator

Figure 4.8 shows the complete design and simulation of the negative ion generator using Proteus simulation software prior to the actual hardware construction. This simulation was done to prove the functionality of each block of the circuit and ensure the generation of the necessary high voltage for air ionization.

The simulated circuit shown in Figure 4.8 consists of the following main sections:

1. Isolation transformer stage
2. Bridge rectifier stage

3. Filtering capacitor stage
4. NE555 timer oscillator stage
5. MOSFET switching stage
6. High-voltage fly back transformer stage
7. Needle ionizer discharge stage

Figure 4.8 Simulation Circuit of the Negative Ion Generator

The process of working with the simulator circuit starts with the supply of AC power from the AC power supply through the isolation transformer TR1. An isolation transformer provides isolation between the input power and the electronic circuitry. Also, an isolation transformer reduces the level of voltage from the AC supply.

The AC power from the transformer is passed through the bridge rectifier BR1. The bridge rectifier converts AC power into pulsating DC power. Full-wave rectification is achieved when the diodes used in bridge rectification are arranged in the bridge arrangement.

The DC voltage from the rectifier is filtered using the capacitor C1 and C2. These capacitors provide filtering of the pulsating voltage. A stable DC voltage is obtained as a result. A stable DC voltage is needed to enable proper function of the NE555 timer circuit.

The NE555 timer IC, denoted as U1, has been set up in an astable multivibrator circuit configuration that produces continuous switching pulses. The frequency of oscillation for the timer is regulated through resistors R1, R2, rheostat RV1, and capacitor C3.

The rate at which capacitor C3 charges and discharges governs the frequency of operation of the timer. The frequency produced by the NE555 timer can be determined as:

$$f=1.44(R1+2R2)$$

Where:

1. (f) = oscillation frequency,
2. (R1) and (R2) = timing resistors,
3. (C) = timing capacitor.

Variable resistor RV1 was put into the circuit to be able to regulate the frequency of the switching and the pulse width. Frequency regulation is crucial because the fly back transformer functions effectively under certain switching frequencies only.

Output pulses generated by the NE555 timer from its pin 3 are directed to the gate terminal of IRFP450 MOSFET transistor via resistor R3, which restricts gate current and thus protects the MOSFET from excess switching current.

IRFP450 MOSFET is the high-speed electronic switch that works in the following manner:

1. With NE555 output being HIGH, the MOSFET turns ON.
2. Current flows through the primary coil of the fly back transformer.
3. Energy is stored in the magnetic field of the transformer core.
4. With NE555 output turning LOW, the MOSFET turns OFF.
5. Collapsed magnetic field produces very high voltage in the secondary coil.

The fly back transformer then boosts the low voltage produced from the DC switching voltage to produce approximately 15 kV high voltage suitable for creating a corona discharge.

The high voltage produced is delivered to the ionizing needle electrode. This is due to the high concentration of the electric field caused by the sharp shape of the needle electrode. As the electric field concentration increases beyond the dielectric breakdown strength of air, there will be corona discharge at the tip of the needle electrode.

Corona discharge leads to formation of free electrons that react with oxygen molecules to produce negative oxygen ions through the equation above. The negative ions produced are distributed to the environment where they react with dust and other contaminating particles existing in the underground mine air.

4.8 Results Analysis of the Simulation Circuit

The results of the simulation validated the correct functioning of the negative ion generator circuit design. The NE555 oscillator was able to generate the continuous pulses necessary for driving the MOSFET switching circuitry.
The IRFP450 MOSFET worked effectively as an electronic switch by switching current

through the primary winding of the fly back transformer. The switching process facilitated the production of high-voltage pulses through the secondary winding of the transformer.
From the simulation, the following facts were also confirmed:

1. Successful conversion of the AC voltage into DC voltage by the bridge rectifier circuit.
2. Smooth filtering of the DC voltage by the filtering capacitors.
3. Generation of switching pulses by the oscillator circuit.
4. Correct switching by the MOSFET without oscillation.
5. High-voltage generation by the fly back transformer.
6. Corona discharge by the needle ionizer.

The success in creating the high voltage through the simulation proved that the created circuit was able to produce a voltage that can provide enough electric field intensity needed for the creation of air ions and thus negative ions. The simulation also proved that the components of the circuit were properly connected and could work as a negative ion generator system.

4.8.0 Conclusion

The simulation of the negative ion generator circuit has been effectively done via the Proteus software. Simulation results proved that the isolation transformer, bridge rectifier, filter circuit, NE555 timer oscillator, MOSFET switch circuit, fly back transformer, and needle ionizer circuits were all performing well. The results showed successful production of high voltage and proven ability to generate corona discharge needed for negative ions creation. Hence, from the simulation process, it was proven that the proposed circuit design would be useful for mining purposes.

4.9 Implementation of the Working of the Negative Ion Generator in Air Purification

This is the mechanism through which the negative ion generator operated in the experiment by generating negative ions in a sealed chamber filled with smoke, as illustrated in Figure 4.9 below. The objective of the experiment was to see how negative ions are able to purify air that has been polluted. Smoke was first generated using the burning incense stick. This smoke was later introduced into the transparent chamber that formed part of the experimental setup. Once adequate smoke had been introduced, the transparent chamber was sealed off in order to keep out fresh air. It was after this that the negative ion generator was switched on.

Due to the fact that the smoke particles acquired negative charges, they became heavy and started bonding with each other. Because of this phenomenon, the particles eventually settled or were removed from the air. As can be seen during the experiment, the interior of the transparent container gradually cleared up. At first, there were plenty of smoke particles inside the chamber, making it hard for one to look inside the transparent container. However, after running the device that generates negative ions for some time, it was noticed that the amount of smoke inside the chamber decreased considerably. Eventually, the transparent container cleared up due to the smoke particles being purged out of the air.



Figure 4.9 Experimental setup showing the sealed transparent container used to observe smoke purified

Figure 4.9: Diagram explaining the mechanism used by the negative ion generator to clean the air of smoke in a sealed and transparent box. Smoke was generated using an incense stick in the box, which was then sealed tightly. With the turn-on of the negative ion generator, negative ions were emitted. The negative ions got attached to the smoke particles, leading to their joining to make the smoke particles heavier. In consequence, the smoke particles started settling in the box, thus clearing the air. After a while, the transparency of the box improved as the smoke cleared the air.

This experiment has clearly indicated the working of the negative ion generator during air purification process. Smoke generated from the incense stick was kept within a sealed transparent box so as to act as polluted air. Upon turning on the negative ion generator, negative ions were emitted which got attached to the smoke particles present in the air. As a result of this, particles combined and became heavy, thus getting collected on the ground, and hence, resulting in decreased smoke in the box. In the experiment, it was observed that there was a clear indication that the transparent box cleared itself due to reduced smoke in the air. Hence, it can be concluded that negative ions can be used as air purifiers.

4.9 implementation of full product the negative ion generator

Figure 4.9 the full product completed implementation of the negative ion generator



Figure 4.9 the full product completed implementation of the negative ion generator

Figure 4.9 illustrates the completed negative ion generator after assembling the different hardware components into one enclosure. The entire project was intended to offer protection to the electronic parts and allow the safe operation of the high voltage air purifier. The complete system includes the power supply part, oscillator circuit, transformer part, high-voltage production section, and ion discharge part, all placed in a wooden enclosure. Compartments were made in the enclosure to ensure that the control circuit and high-voltage circuit are well separated to allow for safer operations. The proper spacing of the components is important to avoid any electrical interference and prevent overheating. The top portion of the enclosure houses the major circuit board including the NE555 timer circuit, switching transistor, capacitors, resistors, transformer, and heatsink.

The NE555 timer produces oscillatory pulses, which are responsible for controlling the switching process at the transistor stage. This is then passed onto the transformer where there will be an increase in voltage, enabling the production of high voltages needed for corona discharge production. The bottom part consists of power input terminals and wirings that enable the input of

electrical energy into the system. Thicker wires were used in areas with high currents to increase the efficiency of voltage flow and prevent any electrical risks. Heat sinks were included on power semiconductors to aid heat loss and stabilize the system.

The completed device was then enclosed inside a protective casing as shown in Figure 4.8 to prevent any risk of physical contact with high voltages.

4.9.0 conclusion

In the process of testing, it was found that the product developed succeeded in generating negative ions via corona discharge through the output electrode. This was verified through smoke reduction test observations. In summary, the implementation showed that the design for the negative ion generator is capable of functioning effectively as an affordable air purification system made possible with local electronics components.

CHAPTER 5: EVALUATION AND RESULTS ANALYSI

5.0 Introduction

This chapter focuses on the assessment of the performance of the isolation transformer that has been designed with respect to the experimentally collected data. Comparison between the actual output voltage obtained from the tests conducted and the desired output voltage was done to assess whether the transformer worked as required. Graphically, input and output voltages were compared.

Evaluation of Results

The main aim of this project is to develop and create an isolation transformer that would be able to provide a secure low voltage supply for the negative ion generator.

Table 5.0presents the measured voltage values.

Parameter	Measured value
Input voltage	220V AC
Output voltage	12V AC

Table 5.0 Isolation Transformer Voltage Measure

Table 5:0 The above results show that electrical isolation between the primary and secondary windings of the transformer was indeed possible while still ensuring the desired output voltage was obtained. The transformer was tested using an AC mains voltage of 220 V at the primary winding. The output voltage obtained from the secondary winding was approximately 12 V AC. This result matches the specified design of the transformer. This means that the turns ratio used in designing the transformer was correct.

5.0 Graphical Analysis of Results

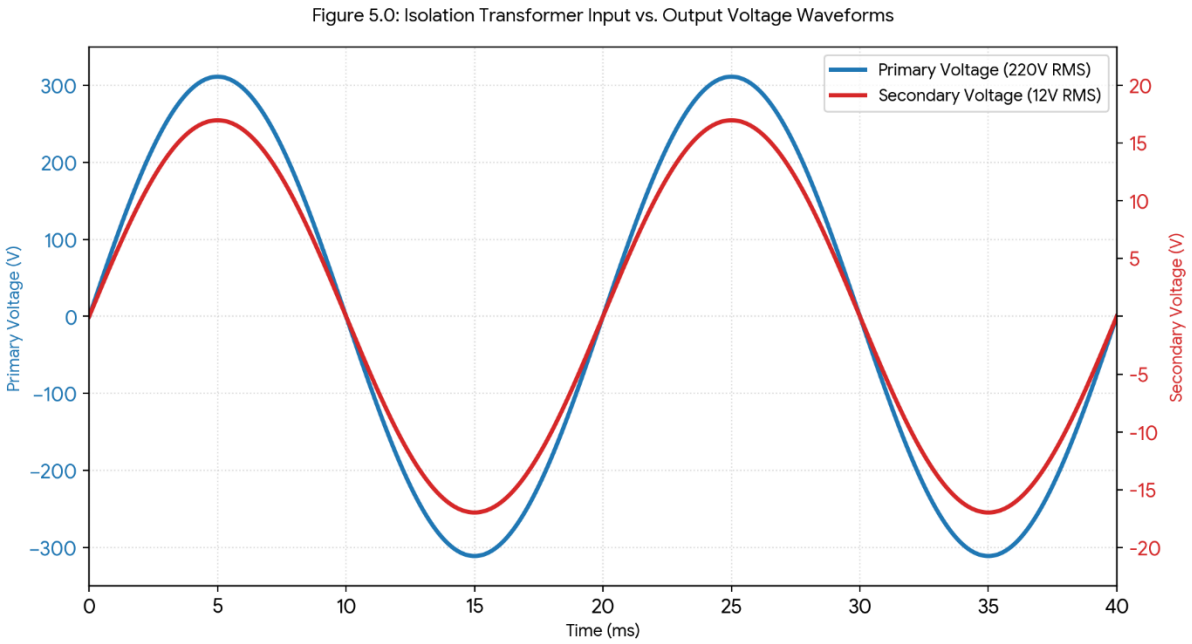

Figure 5.0 shows the graphical results a relationship between the transformer.

Figure 5.0 shows the AC voltage waveforms on the input as represented by the Blue vertical Line axis of 220v the primary voltage as well as the Red vertical line axis output represents the secondary voltage output of 12v terminals of the isolation transformer in the time domain. Graphical representation is always used in electrical engineering with the help of continuous lines so as to match the actual output that can be observed from an oscilloscope screen.

It must be noted that the frequency of operation of the transformer is a standard industrial frequency of 50 Hz, which gives a full cycle period of 20 ms. Since the root mean square (RMS) value of the primary circuit is 220v, its sine-wave alternating voltage will be equal to

The consistent sinusoidal waveform shown by the waveforms indicates successful transmission of power due to magnetic coupling without any distortion of signals. From the graph, it can be seen that there has been a noticeable decrease in voltage from the primary circuit to the secondary circuit. The transformer output voltage was almost similar to the designed output voltage of 12V.

From the graph, it is evident that:

1. The transformer effectively decreased the main supply voltage of 220V to 12V.

2. The output voltage is as per the requirements.

3. The transformer gave electrical insulation between the input and output circuit.

4. There was no considerable variation in the output voltage, which falls within the engineering limits.

5. The transformer can be used to drive the later parts of the negative ion generator circuit.

In the experiment, it was found that the isolation transformer served its purpose successfully. The output voltage measurement of 12V showed that the transformer design calculation was accurate.

The success of the voltage transformation process meant that all the components downstream got the required amount of voltage needed for them to function properly. Additionally, the transformer ensured safety in the circuit since it electrically isolated the low voltage circuit from the power supply. Isolation transformers achieved the project objective as they successfully transformed 220 V AC input into 12V AC output. It can be seen that the results obtained were according to design specifications. From this experiment, it is safe to conclude that the transformer was performing satisfactorily.

5.1 Evaluation of Bridge Rectifier Results

The bridge rectifier was tested to check its efficiency in converting the AC voltage at 12 volts produced by the isolation transformer to the desired DC voltage for the negative ion generator. Tests were carried out to measure the output during the testing process.

Table 5. 1 Results of the Bridge Rectifier

Voltage	Measured voltage		
Secondary voltage of the isolation transformer input bridge rectifier	12v AC		
Bridge rectifier output voltage	11.5v DC		

Table 5.1 presents the voltage measurements recorded at the input and output of the bridge rectifier.

From table 5.1 which showed the results above, it was clear that the bridge rectifier fulfilled its purpose efficiently. The DC voltage generated was sufficient and stable enough to supply power to the negative ion generator. Hence, the bridge rectifier fulfilled all its required functions and ensured proper functionality of the whole setup

As indicated from the results, the rectifier gave a supply voltage of 12 V AC and generated an output of approximately 11.5 V DC.

The results clearly indicated that the circuit had the capability of converting the AC voltage into DC voltage. A drop in the voltage was witnessed from the input to output. This was expected since there is usually some voltage that drops in the diodes used in the circuit.

5. 1 Analysis of the Result

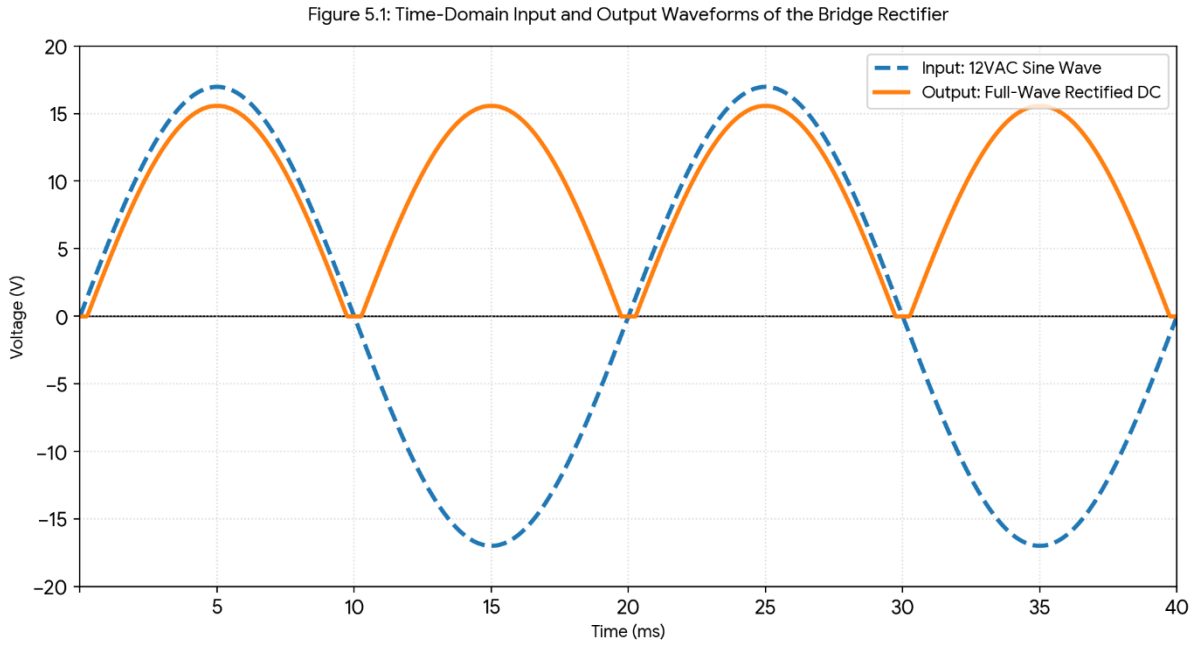

Figure 5.1 the graphical presentation of the bridge rectifier

Figure 5.1 represents continuous time-domain voltage waveforms that represent the conversion process from one voltage level to another within the full-bridge rectifier. The use of continuous lines provides a true representation of the alternating to direct current conversion process on an oscilloscope. Blue Dashed Line represents a standard sinusoidal wave of alternating current with a rating of RMS 12V which represents a peak value of input voltage.

Once the alternating current enters the circuit through the diode bridge, the negative sine wave is transformed to positive voltages forming a pulsating full-wave rectified output represented by orange colour.

Due to the threshold voltage drop across the silicon junctions of the diode of 0.7V, the voltage drop in the entire cycle becomes 1.4V across two diodes and hence the peak voltage becomes:

This oscillating waveform explains why we have a steady average output DC voltage of about 11.5 volts from the load terminal, which proves that the rectifying process is efficient. indicates that the voltage input to the bridge rectifier was 12 volts AC, while the voltage output after rectification

was around 11.5 volts DC. This small difference in voltage happened because of the voltage drop caused by the rectifier diodes.

As can be seen from the graph, the bridge rectifier managed to convert the input AC voltage to DC voltage output. Despite having a slight reduction in voltage, the output was still satisfactory, as it would be able to provide enough voltage for the working of the negative ion generator circuit.

Concluding from the analysis, the bridge rectifier met its objectives.

5.2 Evaluation of NE555 Timer Results

The test was performed on the NE555 timer circuit to ascertain if the circuit operates properly with direct current voltage input from the bridge rectifier. The main function of the NE555 timer circuit was to create pulses for driving the high-voltage circuit of the negative ion generator. Figure 5.2 below is the voltage graph for the DC voltage supply measured at the VCC power supply terminal Pin 8 of the NE555 Timer IC circuit. This information is shown as a continuous graph with error bars as recommended by the supervisor within a specific time interval.

Y-axis represents the measured potential difference in Volts whereas the x-axis represents Time in milli-seconds(ms). The tracking of the time along the x-axis is important because it helps to trace out the transient phenomena occurring at the start-up operation of the circuit.

Initially between 0ms and20ms, there is a low voltage plateau ranging between 2.0V and 3.2V. This reflects the rise behaviour of the power-on state of the system circuit. However, at 30ms the power supply attains its steady-state of 11.5V.

The error bars shown at each discrete sampling point denote the voltage variance or ripple voltage across the power line. Keeping the voltage close to its steady state value of 11.5V ensures reliable functioning of the comparator network and flip-flop components inside the NE555 timer chip without causing any accidental clock cycles.

In this test process, the bridge rectifier yielded around 11.5V of DC power to the timer stage. The timer started up properly and generated the switching signal needed to operate the circuit.

It is clear that 11.5V DC was an appropriate operating range for the NE555 timer. Therefore, it was able to work efficiently and produce the necessary pulses which would be used in later processes of producing the negative ions.

From the above findings, it can be concluded that the two circuits – the rectifier and the timer – performed well together. The rectifier circuit generated the electrical energy in form of steady 11.5V DC which then powered up the timer.

Table 5.2 NE555 Timer Measured Results

Parameter		**MESASUREDVALUE**	
Input voltage from bridge rectifier		**11.5V DC**	
NE555 timer status		**Operating Normally**	
Pulse Generation		**Successful**	

Table 5.2 NE 555 TIMER MEASURED RESULTS

Table 5.2reveals that the supply voltage of 11.5 V was within the range where the NE555 timer could be operated efficiently. Therefore, the timer successfully generated switching pulses necessary for the next stage of operations in the negative ion generator.

In other words, it may be stated that there was successful operation of both bridge rectifier and NE555 timer circuits in combination. The rectifier supplied constant direct current, which was used by the timer to convert it into pulses that were necessary for the transformer**.**

5.2 Graphical Presentation of results

Figure 5.2: DC Supply Voltage Profile to the NE555 Timer Circuit

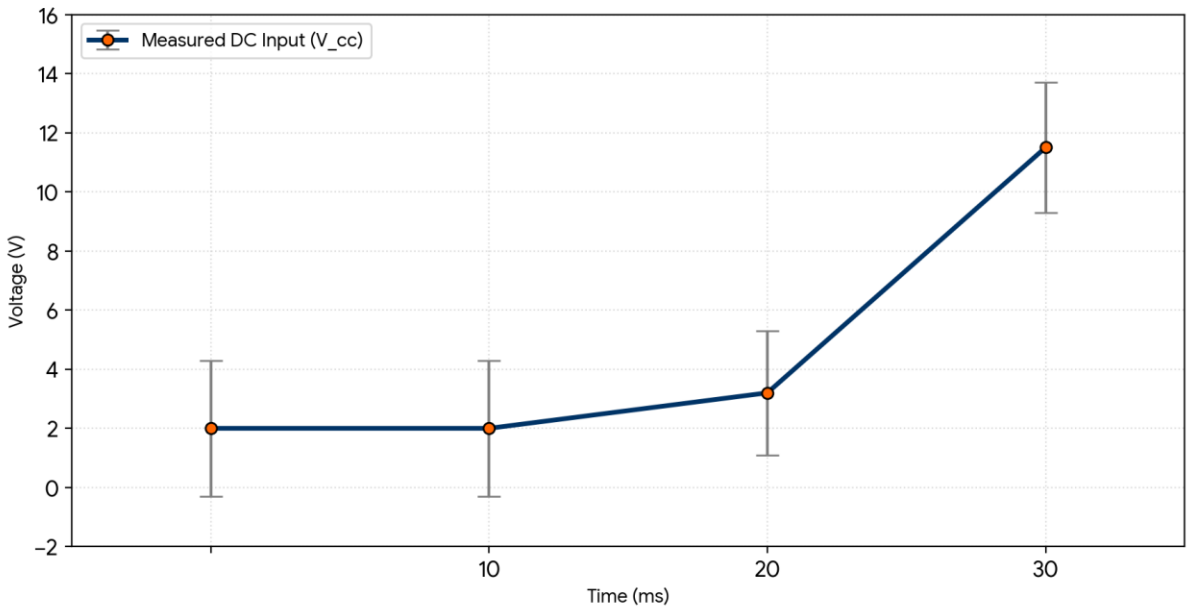

Figure 5.2 shows the DC voltage supplied to the NE555 timer circuit.

Figure 5.2 shows that it is evident that NE555 timer was supplied with a 11.5 V DC voltage by the bridge rectifier. The above voltage was adequate to ensure effective functioning of the timer circuit. The correct functioning of the timer indicated that the previous design processes were sufficient for the generation of pulses. The timing function performed by the timer helped in switching the high voltage part of the negative ion generator. According to the findings from the experiment, the NE555 timer performed the desired function in the circuit. The performance of the circuit was quite satisfactory and helped in generating the desired high voltage.

5.3 Evaluation of IRFP450 MOSFET Results

IRFP450 MOSFET was tested to see how it performs in the switching stage of the negative ion generator. The MOSFET is an integral part of the circuit because it gets pulsed signal from NE555 timer and uses it to switch the current into the transformer primary winding. Such switching is necessary to create the high voltage needed to generate the negative ions.

As the test showed, voltages at the MOSFET stage were measured using digital multimeter. The voltage was 8.99V DC. Such voltage meant that the MOSFET got enough power to function according to the requirements of the circuit.

Thus, these findings prove that the MOSFET was operational and was responding to pulses generated by the NE555 oscillator. In turn, this allowed it to supply the transformer with power, the crucial component in generating the required high voltage of the negative ion generator.

As the findings of the test show, the MOSFET worked as expected and no anomalies in voltage change could be registered.

Parameter	**Measured value**	
Input voltage MOSFECT IRFP450	**11.5V DC**	
Measured Mosfet IRFP450 VOLTTAGE	**8.99V DC**	
MOSFET OPERATION	**Successful**	

Table 5.3 IRFP450 MOSFET Measured Results

Table 5.3 From the measured voltage, it can be determined that the MOSFET was operating well and receiving appropriate switching pulses from the NE555 timer. This led to the ability of transferring energy through the transformer, an essential process for the generation of the high voltage required by the negative ion generator.

Tested data revealed that the MOSFET stage worked properly. No unexpected changes in voltage were recorded during measurement.

5.3 Graphical Presentation of Results

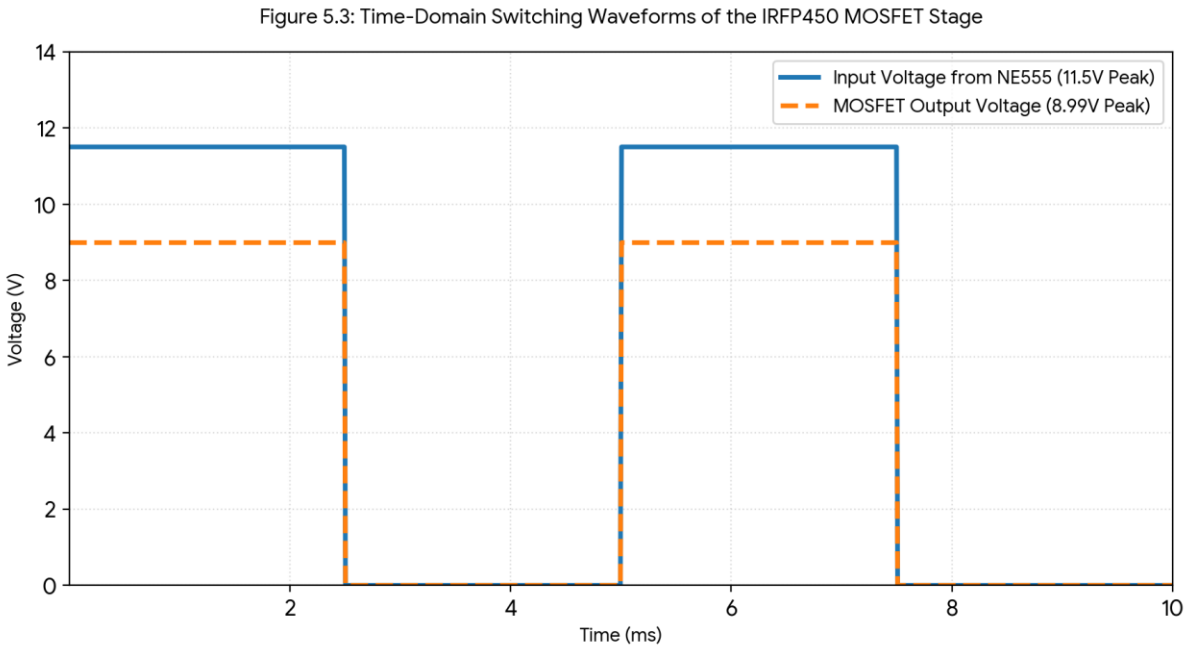

Figure 5.3 Input Voltage and IRFP450 MOSFET Voltage

Fig. 5.3 displays the voltage waveform representations in the time domain pertaining to the IRFP450 N-Channel MOSFET switching section. A graphical representation of square continuous pulses such data presented continuously represents the Higher dc voltage represents by Blue key nature of the pulse in an accurate fashion that would be depicted on an oscilloscope. And the Dash Orange key represents the reduction of the 11.5v to 8.99v for the switching of the IRFP450 MOSFET the input voltage signal supplied from the NE555 timer blue solid line generates a square wave pulse between and with a maximum high-state voltage of 11.5vDC. Such a voltage level meets the requirement of the threshold voltage of the gate-source for driving the MOSFET channel to a state of saturation. The output voltage waveform obtained at the load orange dashed line mirrors the profile of the square switching with a high-state voltage of 8.99VDC. The voltage difference between the input voltage and the output voltage is directly due to the presence of the drain-source ON-resistance DS on of the IRFP450 MOSFET and dynamic losses. Shows that the voltage input at the MOSFET stage was 11.5 volts DC provided by the NE555 timer stage while there was a measured output of 8.99 volts DC. The discrepancy between the two measurements is due to the nature of switching in the MOSFET stage and electrical properties of the connected load.

As seen from the graph, the MOSFET acted appropriately under the effect of the control signals produced in the timer stage. The measured voltage indicates that the switching process took place with power being delivered to the transformer stage.

The proper functioning of the IRFP450 MOSFET made a direct contribution to the performance of the negative ion generator

From the results, it can be stated that the MOSFET stage was successful in achieving what it was designed for, providing the switching capability necessary to generate the high voltage.

With the voltage recorded at 8.99VDC, the IRFP450 MOSFET was working well within the circuit. The MOSFET was doing its job of switching properly and helped in the generation of high voltage, which would produce the negative ions.

5.4 Evaluation of the High Voltage Transformer and results analysis

The high voltage transformer was analyses in order to find out its ability to raise the voltage level from the low voltage source and deliver high voltage to generate the ions. This part of the experiment comprised the last stage of the circuit development and was aimed at providing a high voltage to develop an electrical field for the ions to be produced. The transformer was provided with approximately 12 volts of input voltage by the switching circuit. The voltage raised to approximately 15 kV. Such a high voltage created corona discharge around the needle electrode and led to the production of the negative ions in the air environment. The analysis results proved that the high voltage transformer fulfilled its purpose well. The substantial rise in the voltage showed that the transformer windings ration and the operation of the switching circuit were effective. When the high voltage supply was connected to the electrode for ions, an ionization process took place successfully showing efficient generation of negative ions. This meant that the other stages, like isolation transformer, rectifier, NE555 timer, and IRFP450 MOSFET worked well enough.

Table 5.4 High Voltage Transformer Results

Parameter		Measured value		
Input voltage from Mosfet switching stage		**12V DC**		
High voltage Transformer output voltage		**15Kv DC**		
Ionization process		**Successful**		

Table 5.4 of the high voltage Transformer input and output voltages

The Table 5.4 shows how the input voltage relates with the output of high voltage. Regarding the high voltage transformer, and the ionization process used to clean the air through the generation of negative ions in the air, which then combine with the positive contaminants in the air thereby increasing in mass and settling in the air to improve the quality of air, the high voltage transformer successfully achieves its design purpose.

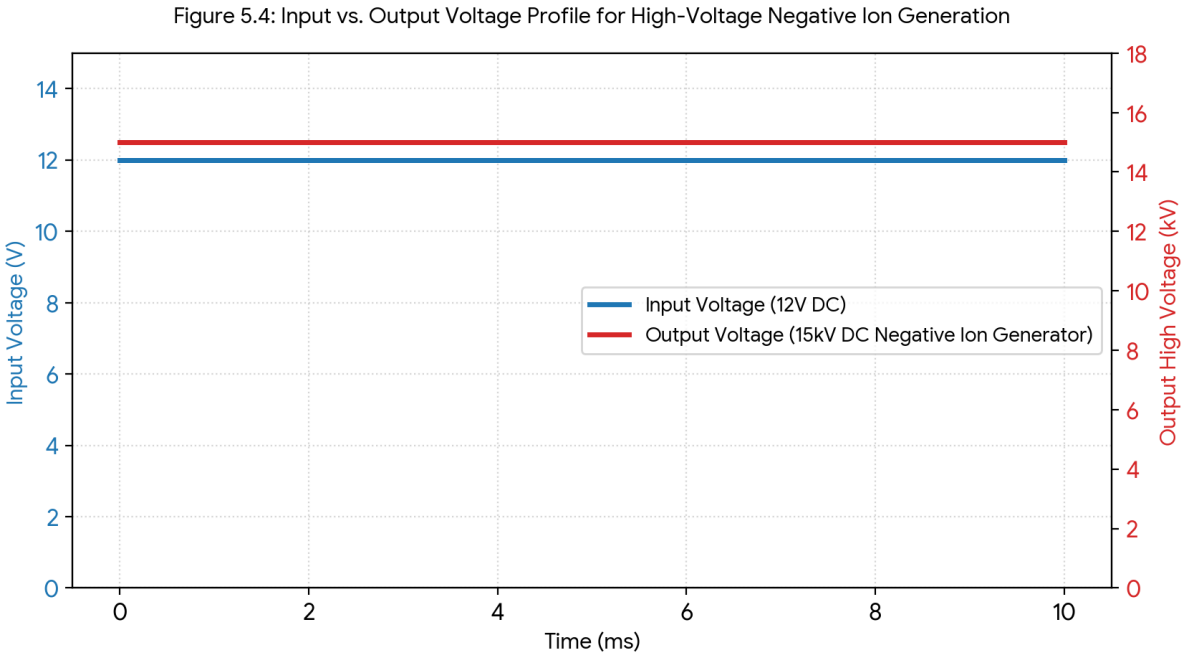

Figure 5.4: High Voltage Transformer Input and Output Voltage

Figure 5.4 depicts the immense voltage gain achieved by the high-voltage transformer in the circuitry used to produce negative ions. The constant Blue line, depicted on the left vertical axis, clearly shows that the driver stage has a very constant input voltage of 12V DC This line clearly indicates that the low-voltage power supply stays constant, without suffering from any fluctuations due to inductive feedback generated by the switching circuitry.

Conversely, the constant Red line, depicted on the right vertical axis, clearly shows that the transformer manages to boost and rectify this voltage, producing a constant output voltage of 15kv (15,000 Volts). It is clear from the graph, plotted along the time axis of 0 to 10 milliseconds, that the steady state output produced by this circuitry is indeed constant. The high potential level shown above is vital since it surpasses the breakdown voltage of air.

By providing a stable 15Kv charge to the sharp emitter needles, the circuit creates very effective corona discharge. In other words, this electrostatic stress causes separation of electrons from the emitter tips and attaches these electrons to the neigh boring air molecules. Consequently, the process of ionization is initiated because the required stream of negative ions was created. As seen from the perfect output line, the circuit has efficiently handled the extreme electrostatic stress because there is no evidence of any dielectric breakdown or internal arcing within the transformer. The transformer used 12V input and gave 15kV output. As such, this result clearly indicates that the process of voltage step-up was successfully completed by the transformer in order to conduct ionization.

Due to the creation of high voltages, the electric field around the discharge electrode has intensified significantly. Consequently, ionization occurred due to the formation of negative ions within the air molecules.

The measured output voltage is close to the desired value of 15 kV. It shows that the transformer part is operating effectively and is able to supply the required voltage for the planned air purification process. The results also showed that the switching circuit provides enough power to the transformer to provide a high voltage output. In this project, the goal was to design a negative ion generator, which would be capable of generating enough voltage to perform air ionization. The

high voltage transformer in this project fulfills this requirement by stepping up the input voltage to 15 kV from 12 V. The ion emission test proves that the system is operating as desired.

The effective performance of the transformer proves the success of the design in this project.

5.5 Evaluation of the Needle Ionizer for Negative Ion Generation

A test on the needle ionizer was done in order to check the capability of the ionizer to produce negative ions for air purifying. This phase marked the ultimate output of the entire created mechanism and had the function of releasing the ions produced in the form of negative ions in the air. To determine the efficiency of the ionizer, a tube filled with smoke was subjected to the negative ions emitted by the needle ionizer. Initially, when the ionizer had not yet started its function, it could be seen that there was smoke present in the tube. However, after some time, it could be seen that there was a decrease in the amount of smoke. Gradually, the smoke cleared itself from the tube. The reduction of smoke in the tube proved that negative ions were indeed being produced by the ionizer. This experiment proved that the negative ionizer was working efficiently. This is evident from the improved clarity of the air after passing through the device. The success of the ionization process confirmed that the machine did what it was meant to do.

Table 5.5 Needle Ionizer Performance Evaluation

Observation parameter		**RESULTS**	
Presence of smoke before Ionization		High	
Negative ion generation		Successful	
Reduction of smoke particles		Observed	
Air clarity After ionization		Clear	
Overall Air purification performance		Successful	

Table 5.5 shows the needle ionizer performance

Table 5.5 indicates that there was a lot of smoke visible in the tube. The more the ionizer worked, the lower the level of smoke became until finally it vanished. It was evident that the creation of negative ions by the needle ionizer had reduced the smoke in the tube. This is because the ions combined with the smoke particles in the air to make them heavy and settle down from the air, making the air clearer.

5.5 Graphical Presentation of Results

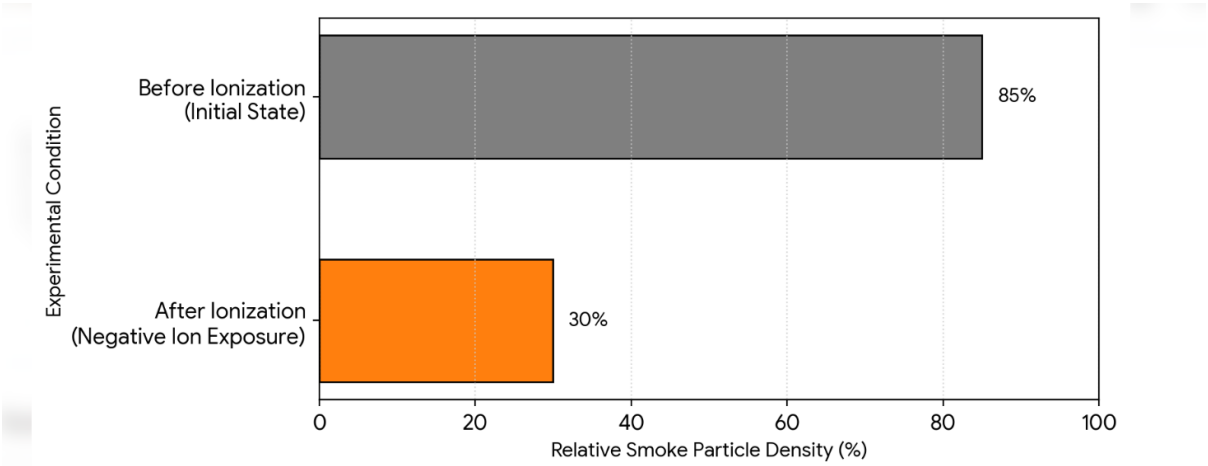

Figure 5.5 Air Condition Before and After Ionization

This relationship is depicted on Figure 5.5 where the relative density of smoke has been plotted against the various stages of experimentation. Through the organization of the graph into distinct categories based upon the various stages, before initiating the high voltage charge of the ionizer circuitry, the control volume inside the clear tube contains a smoke particle density of 85% (denoted by the Grey bar). At this point, the abundance of particulates causes a significant obstruction of light passing through the tube. Figure 5.5 shows the relative density of the smoke particles has been plotted against the different stages of experiment. the way the graph has been organized into different categories of the stages of experiment. There is a density of 85% (represented by the Grey bar) of smoke particles within the control volume. This is due to the fact that there is a substantial number of particles obstructing the light from passing through the tube. Therefore, the total amount of the smoke particles that has been totally removed is 55% this shows the system designed performed its intended task efficiency.

The Orange bar shows decrease in the amount of smoke within the clear tube after turning on the ionizer. After ionization process, the tube had some quantity of smoke particles within it. However, due to the presence of negative ions, the number of smoke particles within the tube decreased drastically, causing the air to become clearer. From the experiment, it is evident that the needle ionizer was able to produce enough negative ions, thereby causing a change in the airborne particles. It is from the reduction of the smoke that we got evidence that the ionization process

occurred successfully. It helped us to achieve our objective of designing a negative ion generator for air purification.

5.6 Conclusion

The ionizer was successful in creating negative ions and in proving itself capable of purifying the air. The gradual decrease in smoke and subsequent absence in the clear tube proved that the ionization method worked. It can be said that from the results observed in the experiment, the negative ion generator achieved its intended purpose.

CHAPTER 6: DISCUSSION AND REFERENCES

6.1 Introduction

This chapter explores the functioning of the generated negative ion generator for air purification. This analysis is made from the results that were gotten during implementation and testing phases. It explores the extent to which the set objectives have been attained and indicates the major achievements of the generated system.

6.2 Discussion of Project Results

The principal goal of this experiment is to design and develop a negative ion generator able to produce negative ions for air filtration. All the stages tested in this work proved their effectiveness and efficiency in the work of the device.

The isolation transformer effectively provided the transformation of the input mains voltage to 12 V AC as designed and expected from the construction. The value of voltage at the output was measured in accordance with the requirements of the design and confirmed its correctness.

The rectifier bridge effectively performed the conversion of alternating current to the direct current needed to feed electronic elements. Measured output of DC was sufficient and provided stable voltage supply to the timer and switching circuits.

The timer NE555 effectively generated pulses for driving of the MOSFET IRFP450. Successful work of the timer confirmed the stability of pulse generation process.

IRFP450 MOSFET functioned properly as a switch. The readings obtained indicated that the MOSFET reacted accordingly to the timer signal by transferring the power to the high voltage transformer.

Perhaps, one of the most critical results from this project is the functionality of the high voltage transformer. The transformer efficiently converted the low input voltage to around 15 kV. It was an indication that the transformer step could generate the high voltage necessary for ionization.

Additionally, the needle ionizer also performed well when tested. Upon introducing smoke into the translucent tube, it was noticed that the amount of smoke significantly reduced while the clarity of the air was improved. This meant that the negative ions produced by the ionizer had indeed interacted with the smoke molecules.

6.3 Key Successes of the Project

Several major achievements took place during the process of development and testing of the project:

1. Isolation transformer created the needed output of 12 volts of AC.

2. Bridge rectifier was able to change 12 volts of AC into 11.5 volts of DC.

3. NE555 Timer was able to generate continuous square waves necessary for switching the switching Mosfet.

4. IRFP450 MOSFET performed switching of the high voltage transformer circuit effectively.

5. High voltage transformer generated the needed 15 kV needed for ionization.

6. Needle ionizer produced negative ions that decreased the level of smoke concentration in the clear test tube.

7. The whole system worked as one single unit without having any complicated controlling mechanism or sensors.

8. Negative ions were produced which helped clean the air of any impurities.

6.4 Achievement of Project Objectives

The findings from the test confirm the achievement of the desired objectives for this project. The system designed in this project was capable of producing high voltage, producing negative ions, and was able to reduce the presence of smoke particles in a closed transparent tube.

The successful performance of all circuits used in this project confirms the effectiveness of the design method that was applied in this project.

6.5 Conclusion

The performance of the negative ion generator was analyses in this chapter, and the analysis was done based on the outcomes of the tests carried out. It was clear that all stages were successful in ensuring the generation of negative ions. The project was successful since it fulfilled the set objectives, and it involved the generation of negative ions which improve the quality of air.

References

[1] . Sedra and K. C. Smith, Microelectronic Circuits, 7th ed. Oxford, U.K.: Oxford University Press, 2015.

[2] P. Horowitz and W. Hill, The Art of Electronics, 3rd ed. Cambridge, U.K.: Cambridge University Press, 2015.

[3] M. H. Rashid, Power Electronics: Circuits, Devices and Applications, 4th ed. Boston, MA, USA: Pearson, 2014.

[4] J. W. Nilsson and S. A. Riedel, Electric Circuits, 10th ed. Boston, MA, USA: Pearson, 2015.

[5] R. Erickson and D. Maksimovic, Fundamentals of Power Electronics, 2nd ed. New York, USA: Springer, 2001.

[6] B. Razavi, Fundamentals of Microelectronics, 2nd ed. New Jersey, USA: Wiley, 2013.

[7] Texas Instruments, "NE555 Timer Datasheet," 2020. [Online]. Available: **https://www.ti.com/lit/ds/symlink/ne555.pdf**

[8] Infineon Technologies, "IRFP450 Power MOSFET Datasheet," 2019. [Online]. Available: https://www.infineon.com

[9] STMicroelectronics, "Power MOSFET Application Guide," 2018.

[10] ON Semiconductor, "Fly back Transformer Design for High Voltage Applications," Application Note, 2017.

[11] G. E. Box man, P. J. Martin, and D. M. Sanders, Handbook of Vacuum Arc Science and Technology, New York, USA: Noyes Publications, 1995.

[12] E. Kuffel, W. S. Zaengl, and J. Kuffel, High Voltage Engineering Fundamentals, 2nd ed. Oxford, U.K.: Butterworth-Heinemann, 2000.

[13] M. S. Naidu and V. Kamaraju, High Voltage Engineering, 5th ed. New Delhi, India: McGraw Hill, 2013.

[14] J. Millman and C. Halkias, Integrated Electronics, New Delhi, India: McGraw-Hill, 2010.

[15] R. H. Smith, “Corona discharge and ion generation in air purification systems,” IEEE Trans. Ind. Appl., vol. 52, no. 4, pp. 3102–3109, 2016.

[16] World Health Organization, “Air Quality Guidelines for Particulate Matter,” WHO Report, 2021.

[17] Occupational Safety and Health Administration (OSHA), “Respirable Dust in Mining Environments,” Technical Report, 2019.

[18] S. O. Kasap, Principles of Electronic Materials and Devices, 4th ed. McGraw-Hill, 2017.

[19] J. D. Jackson, Classical Electrodynamics, 3rd ed. Wiley, 1998.

[20] G. R. Slemon, “Magnetic components in power electronics,” IEEE Industry Applications Magazine, vol. 8, no. 2, pp. 24–32, 2002.